SAFETY PRECAUTIONS

- Read this manual thoroughly before using LGIS equipment. Also, pay careful attention to safety and handle the module properly.
- Safety precautions are for using the product safely and correctly in order to prevent the accidents and danger, so make sure to follow all directions in safety precautions.
- The precautions are divided into 2 sections, ‘Warning’ and ‘Caution’. Each of the meaning is represented as follows

⚠ Warning	Indicates that incorrect handling may cause hazardous conditions, resulting in death or severe injury.
⚠ Caution	Indicates that incorrect handling may cause hazardous conditions, resulting in medium or slight personal injury or physical damage.

- The symbols which are indicated in the PLC and User’s Manual mean as follows;

⚠	This symbol means paying attention because of danger in specific situations.
⚠	This symbol means paying attention because of danger of electrical shock.

- Store this manual in a safe place so that you can take it out and read it whenever necessary. Always forward it to the end user.

SAFETY PRECAUTIONS

Design Precautions

⚠ Warning

- Install a safety circuit external to the PLC that keeps the entire system safe even when there are problems with the external power supply or the PLC module. Otherwise, serious trouble could result from erroneous output or erroneous operation.
  - Outside the PLC, construct mechanical damage preventing interlock circuits such as emergency stop, protective circuits, positioning upper and lower limits switches and interlocking forward/reverse operation.

    When the PLC detects the following problems, it will stop calculation and turn off all output in the case of watchdog timer error, module interface error, or other hardware errors.

    However, one or more outputs could be turned on when there are problems that the PLC CPU cannot detect, such as malfunction of output device (relay, transistor, etc.) itself or I/O controller. Build a fail safe circuit exterior to the PLC that will make sure the equipment operates safely at such times. Also, build an external monitoring circuit that will monitor any single outputs that could cause serious trouble.

- Make sure all external load connected to output does NOT exceed the rating of output module.

  Overcurrent exceeding the rating of output module could cause fire, damage or erroneous operation.

- Build a circuit that turns on the external power supply when the PLC main module power is turned on.

  If the external power supply is turned on first, it could result in erroneous output or erroneous operation.

SAFETY PRECAUTIONS

Design Precautions

⚠ Caution

- Do not bunch the control wires or communication cables with the main circuit or power wires, or install them close to each other. They should be installed 100mm (3.94inch) or more from each other.
  Not doing so could result in noise that would cause erroneous operation.

Installation Precautions

⚠ Caution

- Use the PLC in an environment that meets the general specification contained in this manual or datasheet.
  Using the PLC in an environment outside the range of the general specifications could result in electric shock, fire, erroneous operation, and damage to or deterioration of the product.

- Completely turn off the power supply before loading or unloading the module.
  Not doing so could result in electric shock or damage to the product.

- Make sure all modules are loaded correctly and securely.
  Not doing so could cause a malfunction, failure or drop.

- Make sure I/O and extension connector are installed correctly.
  Poor connection could cause an input or output failure.

- When install the PLC in environment of much vibration, be sure to insulate the PLC from direct vibration.
  Not doing so could cause electric shock, fire, and erroneous operation.

- Be sure to there are no foreign substances such as conductive debris inside the module.
  Conductive debris could cause fires, damage, or erroneous operation.

SAFETY PRECAUTIONS

Wiring Precautions

⚠ Warning

- Completely turn off the external power supply when installing or placing wiring.
  Not doing so could cause electric shock or damage to the product.

- Make sure that all terminal covers are correctly attached.
  Not attaching the terminal cover could result in electric shock.

⚠ Caution

- Be sure that wiring is done correctly be checking the product's rated voltage and the terminal layout.
  Incorrect wiring could result in fire, damage, or erroneous operation.

- Tighten the terminal screws with the specified torque.
  If the terminal screws are loose, it could result in short circuits, fire, or erroneous operation.

- Be sure to ground the FG or LG terminal to the protective ground conductor.
  Not doing so could result in erroneous operation.

- Be sure there are no foreign substances such as sawdust or wiring debris inside the module.
  Such debris could cause fire, damage, or erroneous operation.

SAFETY PRECAUTIONS

Startup and Maintenance Precautions

⚠ Warning

- Do not touch the terminals while power is on.
  Doing so could cause electric shock or erroneous operation.

- Switch all phases of the external power supply off when cleaning the module or retightening the terminal or module mounting screws.
  Not doing so could result in electric shock or erroneous operation.

- Do not charge, disassemble, heat, place in fire, short circuit, or solder the battery.
  Mishandling of battery can cause overheating or cracks which could result in injury and fires.

⚠ Caution

- Do not disassemble or modify the modules.
  Doing so could cause trouble, erroneous operation, injury, or fire.

- Switch all phases of the external power supply off before mounting or removing the module.
  Not doing so could cause failure or malfunction of the module.

- Use a cellular phone or walky-talky more than 30cm (11.81 inch) away from the PLC
  Not doing so can cause a malfunction.

Disposal Precaution

⚠ Caution

- When disposing of this product, treat it as industrial waste.
  Not doing so could cause poisonous pollution or explosion.

Revision History

Issue date	Manual No.	Revised Contents
‘02. 05.		First edition of Smart I/O module publishied.

• User’s Manual No. is inscribed on the right bottom side of the back cover.

INDEX

Chapter 1 Overview

1.1 How to use the User's Manual---------- 1-1

1.2 Characteristics of Smart I/O---------- 1-2

1.3 Product Configuration of Smart I/O ---------- 1-3
1.3.1 Type name indication---------- 1-3
1.3.2 Characteristics per module---------- 1-4
1.3.3 Version Compatibility Table per Smart I/O module ---------- 1-6

Chapter 2 Product Specification

2.1 General Specification---------- 2-1

2.2 Power Specification---------- 2-2
2.2.1 Performance Specification---------- 2-2

2.3 Digital Input Module Specification---------- 2-3
2.3.1 DC 16 point input module : GPL/GDL/GRL/GSL-D22A ---------- 2-3
2.3.1 DC 32 point input module : GPL/GDL/GRL/GSL-D24A ---------- 2-4

2.4 Digital Output Module Specification----------2-5
2.4.1 16 point relay output module : GPL/GDL/GRL/GSL-RY2A ---------- 2-5
2.4.2 16 point transistor output module : GPL/GDL/GRL/GSL-TR2A ---------- 2-6
2.4.3 32 point transistor output module : GPL/GDL/GRL/GSL-TR4A ---------- 2-7

2.5 Digital I/O combined Module Specification---------- 2-8
2.5.1 32point I/O combined module (DC16/TR16 point) : GPL/GDL/GFL/GSL-DT4A ---- 2-8

2.6 Communication Module Specification---------- 2-9
2.6.1 Profibus-DP module specification---------- 2-9
2.6.2 DeviceNet module specification---------- 2-9
2.6.3 Rnet module specification ---------- 2-10
2.6.4 Modbus module specification---------- 2-10

2.7 Communication Cable Specification ---------- 2-11
2.7.1 Profibus-DP cable specification---------- 2-11
2.7.2 DeviceNet cable specification---------- 2-12
2.7.3 Rnet cable specification---------- 2-14
2.7.4 Modbus cable specification---------- 2-15

2.8 Terminating---------- 2-16
2.8.1 Profibus-DP terminating---------- 2-16
2.8.2 DeviceNet terminating---------- 2-16
2.8.3 Rnet terminating---------- 2-17
2.8.4 Modbus terminating---------- 2-18

Chapter 3 System Configuration

3.1 Notices in selecting module---------- 3-1

3.2 Names of Each Part---------- 3-2
3.2.1 Basic system configuration---------- 3-2
3.2.2 Names of each part of Smart I/O series---------- 3-3

3.3 I/O Wiring Diagram of Communication Module---------- 3-9
3.3.1 External connection diagram of Smart I/O module---------- 3-9

3.4 Examples of System Configuration---------- 3-17
3.4.1 Profibus-DP system---------- 3-17
3.4.2 DeviceNet system ---------- 3-18
3.4.3 Rnet system ---------- 3-19
3.4.4 Modbus system ---------- 3-20

Chapter 4 Communication Programming

4.1 Overview---------- 4-1

4.2 *High Speed Link*---------- 4-3
4.2.1 Overview---------- 4-3
4.2.2 *High Speed Link* sending/receiving data processing---------- 4-4
4.2.3 Operation order by *High Speed Link*---------- 4-5
4.2.4 GMWIN's setting of *High Speed Link*---------- 4-6
4.2.5 KGLWIN Link parameter setting---------- 4-14
4.2.6 *High Speed Link* Communication status flag information---------- 4-18
4.2.7 *High Speed Link* Speed calculation---------- 4-21

4.3 Function Block---------- 4-25
4.3.1 Overview---------- 4-25
4.3.2 Start of GMWIN Function Block---------- 4-25
4.3.3 Execution of KGLWIN command---------- 4-27

Chapter 5 Profibus-DP Communication

5.1 Overview---------- 5-1

5.2 Communication Specification---------- 5-1

5.3 Basic Performance---------- 5-2
5.3.1 Overview---------- 5-2
5.3.2 Operation by *High Speed Link* ---------- 5-2
5.3.3 SyCon ---------- 5-3
5.3.4 Insertion of master module---------- 5-4
5.3.5 Master module setting---------- 5-5
5.3.6 Insertion of slave---------- 5-6
5.3.7 Slave Configuration ---------- 5-7
5.3.8 Bus parameter setting---------- 5-8
5.3.9 Device allocation---------- 5-9
5.3.10 Configuration download - ---------- 5-11

5.3.11 *High Speed Link* parameter setting in GMWIN---------- 5-12
5.3.12 *High Speed Link* information in GMWIN---------- 5-16
5.3.13 *High Speed Link* parameter setting in KGLWIN---------- 5-20

Chapter 6 DeviceNet Communication

6.1 Overview---------- 6-1

6.2 Communication Specification---------- 6-2

6.3 Communication Parameter Setting---------- 6-3
6.3.1 *High Speed Link* service---------- 6-4

6.4 Program Examples---------- 6-12
6.4.1 GLOFA-GM series---------- 6-12
6.4.2 MASTER-K series ---------- 6-16

Chapter 7 Rnet Communication

7.1 Overview---------- 7-1

7.2 Communication Specification---------- 7-1

7.3 Communication Parameter Setting---------- 7-2
7.3.1 Overview---------- 7-2
7.3.*2 High Speed Link* communication status flag---------- 7-3
7.3.3 GMWIN *High Speed Link* setting---------- 7-3
7.3.4 KGLWIN Link setting---------- 7-12

7.4 Program Examples---------- 7-22
7.4.1 GLOFA-GM series ---------- 7-22
7.4.2 MASTER-K series ---------- 7-24

Chapter 8 Modbus Communication

8.1 Overview---------- 8-1

8.2 Communication Specification---------- 8-1

8.3 Communication Parameter Setting---------- 8-6
8.3.1 GLOFA-GM series ---------- 8-6
8.3.2 MASTER-K series ---------- 8-9

8.4 Function Block---------- 8-11
8.4.1 GLOFA-GM series ---------- 8-11
8.4.2 MASTER-K series ---------- 8-32

8.5 Program Examples---------- 8-34
8.5.1 GLOFA-GM series ---------- 8-34
8.5.2 MASTER-K series ---------- 8-44

Chapter 9 Installation & Wiring

9.1 Installation---------- 9-1
9.1.1 Installation Environment---------- 9-1
9.1.2 Notices in installing Profibus-DP module---------- 9-2
9.1.3 Notices in installing DeviceNet module---------- 9-3
9.1.4 Notices in installing Rnet module---------- 9-8
9.1.5 Notices in installing Modbus module---------- 9-9
9.1.6 Notices in Handling---------- 9-10

9.2 Wiring---------- 9-14
9.2.1 Power wiring---------- 9-14
9.2.2 I/O Machine Wiring---------- 9-16
9.2.3 Grounding wiring---------- 9-16
9.2.4 Cable specification for wiring---------- 9-17

Chapter 10 Maintenance and Repair

10.1 Repair and Check---------- 10-1

10.2 Daily Check---------- 10-2

10.3 Regular Check---------- 10-4

Chapter 11 Trouble Shooting

11.1 Basic Procedure of Trouble Shooting---------- 11-1

11.2 Trouble Shooting---------- 11-2
11.2.1 Action method when POWER LED is OFF ---------- 11-3
11.2.2 Action method when ERR LED is blinking---------- 11-4
11.2.3 Action method when RUN LED is OFF ---------- 11-5
11.2.4 Action method when I/O part does not work normally---------- 11-6
11.2.5 Action method when *Program Write* does not work ---------- 11-8

11.3 Trouble Shooting Questionnaire---------- 11-9

Appendix

A.1 Communication Terminology---------- A-1
A1.1 Profibus-DP ---------- A-1
A1.2 DeviceNet ---------- A-3
A1.3 Rnet ---------- A-4
A1.4 Modbus ---------- A-6

A.2 External Dimension---------- A-7

Chapter 1 Overview

1.1 How to use the User's Manual

This User's Manual provides the information such as product specification, performance and operation method needed to use PLC System composed of Smart I/O module.

The User's Manual is composed of as follows.

CHAP.1 Overview

Here describes the configuration of the user's manual, product characteristics and terminology.

CHAP.2 Product Specification

Here describes common specification of each product used for Smart I/O series.

CHAP.3 System Configuration

Here describes the kinds of product available for Smart I/O series and system configuration method.

CHAP.4 Communication Programming

Here describes common communication program operation method to act Smart I/O module.

CHAP.5 Profibus-DP Communication

Here describes basic communication method of Profibus-DP(Pnet) communication module.

CHAP.6 DeviceNet Communication

Here describes basic communication method of DeviceNet(Dnet) communication module.

CHAP.7 Rnet Communication

Here describes basic communication method of FIELDBUS(RNET) communication module.

CHAP.8 Modbus Communication

Here describes basic communication method of Modbus(Snet) communication module.

CHAP.9 Installation and Wiring

Here describes installation and wiring method, and notices to make sure of the reliability of PLC system.

CHAP.10 Maintenance and Repair

Here describes check list and method to run PLC system normally for a long term.

CHAP.11 Trouble Shooting

Here describes various errors to be occurred while using the system and the action to solve the problem.

Appendix

Here describes the product terminology and external dimension for system installation.

1.2 Characteristics of Smart I/O

1) The characteristics of Smart I/O series is as follows.

(1) Product design based on International Electrotechnical Commission (IEC 61131) (GLOFA series in common)
- Easy support to programming device
- Standard language (IEC 61131-3) provided (IL / LD / SFC)

(2) Open network by selecting international standard communication protocol.

(3) Available to communicate with remote master module independently without power module/CPU module.

(4) Available to set maximum 32 ~ 64 stations.
- Maximum 64 stations (Rnet,Dnet)
- Maximum 32 stations (Pnet,Snet)

(5) Enables to save the cost for installation and maintenance.

(6) Various system configuration and simple maintenance and repair.

(7) Easy to change the system.

(8) Compatible with other maker's product.
- Available to connect Smart I/O to other maker's master.

(9) Easy to set the system as the station address setting by hardware is available.

(10) Simple communication programming.
- Using the GMWIN/KGLWIN high speed link parameter
- But for Modbus, using function block

(11) Supports various I/O.
- DC input 16/32 points, TR output 16/32 points, Relay output 16 points

(12) Supports various OPEN type communication method.
- Profibus-DP, DeviceNet, Rnet, Modbus

(13) Easy to configure and use as integrating PLC.
- Packaged by one unit including CPU, I/O and communication function.

(14) Provides the online network status detection function.
- Available to know the remote module status through high speed link monitor.

(15) Supports high speed communication.

(16) Flexible communication relation is available as the speed shall be set automatically according to the speed of master.
- Profibus-DP, DeviceNet etc.

1.3 Product Configuration of Smart I/O

1.3.1 Type Name Indication

Classification		Model name	Type name indication
DC Input	16 point	GPL-D22A	
		GDL-D22A	
		GRL-D22A	
		GSL-D22A	
	32 point	GPL-D24A	
		GDL-D24A	
		GRL-D24A	
		GSL-D24A	
TR output	16 point	GPL-TR2A	
		GDL-TR2A	
		GRL-TR2A	
		GSL-TR2A	
	32 point	GPL-TR4A	
		GDL-TR4A	
		GRL-TR4A	
		GSL-TR4A	
RY Output	16 point	GPL-RY2A	
		GDL-RY2A	
		GRL-RY2A	
		GSL-RY2A	
DC/TR combined	32 point	GPL-DT4A	
		GDL-DT4A	
		GRL-DT4A	
		GSL-DT4A	

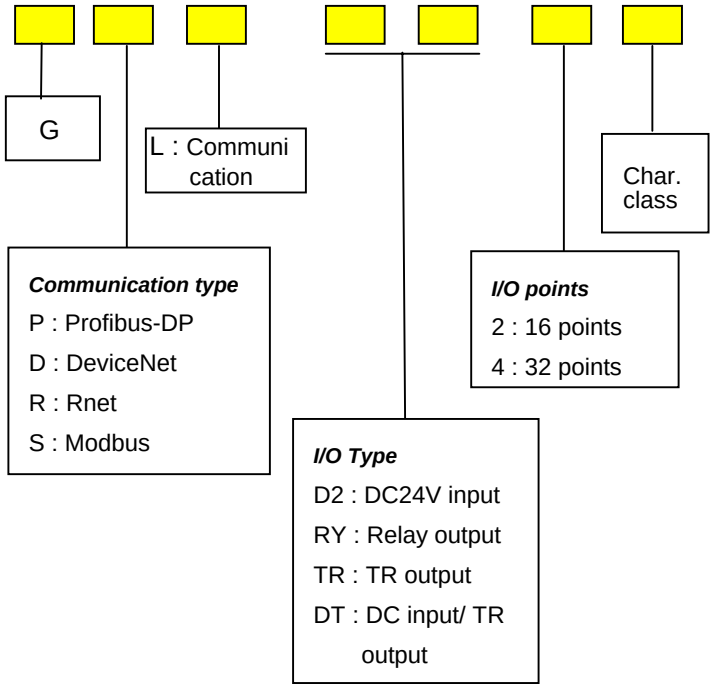

1.3.2 Characteristics per Module

Classification	Product Name	Type name	Specification
Smart I/O	Profibus-DP	GPL-TR2A	• Input voltage(power section) : DC24V(rating) • I/O point : Transistor output 16 points
		GPL-TR4A	• Input voltage(power section) : DC24V(rating) • I/O point : Transistor output 32 points
		GPL-DT4A	• Input voltage(power section) : DC24V(rating) • I/O point(combined) : DC input 16 points/ TR output 16 points
		GPL-RY2A	• Input voltage(power section) : DC24V(rating) • I/O point : Relay output 16 points
		GPL-D22A	• Input voltage(power section) : DC24V(rating) • I/O point : DC input 16 points
		GPL-D24A	• Input voltage(power section) : DC24V(rating) • I/O point : DC input 32 points
	DeviceNet	GDL-TR2A	• Input voltage(power section) : DC24V(rating) • I/O point : Transistor output 16 points
		GDL-TR4A	• Input voltage(power section) : DC24V(rating) • I/O point : Transistor output 32 points
		GDL-DT4A	• Input voltage(power section) : DC24V(rating) • I/O point(combined) : DC input 16 points/ TR output 16 points
		GDL-RY2A	• Input voltage(power section) : DC24V(rating) • I/O point : Relay output 16 points
		GDL-D22A	• Input voltage(power section) : DC24V(rating) • I/O point: DC input 16 points
		GDL-D24A	• Input voltage(power section) : DC24V(rating) • I/O point: DC input 32 points
	Modbus	GSL-TR2A	• Input voltage(power section) : DC24V(rating) • I/O point : Transistor output 16 points
		GSL-TR4A	• Input voltage(power section) : DC24V(rating) • I/O point : Transistor output 32 points
		GSL-DT4A	• Input voltage(power section) : DC24V(rating) • I/O point(combined) : DC input 16 points/ TR output 16 points
		GSL-RY2A	• Input voltage(power section) : DC24V(rating) • I/O point : Relay output 16 points
		GSL-D22A	• Input voltage(power section) : DC24V(rating) • I/O point : DC input 16 points
		GSL-D24A	• Input voltage(power section) : DC24V(rating) • I/O point : DC input 32 points

Classification	Product name	Type name	Specification
Smart I/O	Rnet	GRL-TR2A	• Input voltage(power section) : DC24V(rating) • I/O point : Transistor output 16 points
		GRL-TR4A	• Input voltage(power section) : DC24V(rating) • I/O point : Transistor output 32 points
		GRL-DT4A	• Input voltage(power section) : DC24V(rating) • I/O point(combined) : DC input 16 points / TR output 16 points
		GRL-RY2A	• Input voltage(power section) : DC24V(rating) • I/O point : Relay output 16 points
		GRL-D22A	• Input voltage(power section) : DC24V(rating) • I/O point : DC input 16 points
		GRL-D24A	• Input voltage(power section) : DC24V(rating) • I/O point: DC input 32 points

1.3.3 Version Compatibility Table per Smart I/O Module

The followings describe the list that enables the compatibility of O/S version between various CPU and master module to use Smart I/O series.
Before using the product, please refer to the list below and apply it to system configuration.

Classification	Model type	Available O/S
CPU	GM3	More than Version 2.5
	GM4	More than Version 2.6
	GM6	More than Version 1.9
	GM7	More than Version 1.6
	K1000S	More than Version 3.1
	K300S	More than Version 3.1
	K200S	More than Version 2.2
	K80S	More than Version 1.6
PADT	GMWIN	More than Version 3.6
	KGLWIN	More than Version 3.3
Smart I/O Master	Profibus-DP	More than Version 1.0
	DeviceNet	More than Version 1.2
	Rnet	More than Version 1.0
	Modbus	More than Version 2.0

Chapter 2 Product Specification

2.1 General Specification

The General Specification of Smart I/O series is as follows.

No	Items	Specification					References
1	Use temperature	0 ~ 55 °C					
2	Storage Temp.	–25 ~ +70 °C					
3	Use humidity	5 ~ 95%RH, no dew					
4	Storage humidity	5 ~ 95%RH, no dew					
5	Vibration-resistant	In case of Intermittent vibration				-	IEC6 1131-2
		Frequency	Acceleration	Amplitude		Times	
		10 ≤ f < 57Hz	–	0.075mm		X, Y, Z 10 times each direction	
		57 ≤ f ≤ 150Hz	9.8m/s^2{1G}	–			
		In case of Continuous vibration					
		Frequency	Acceleration	Amplitude			
		10 ≤ f < 57Hz	–	0.035mm			
		57 ≤ f ≤ 150Hz	4.9m/s^2{0.5G}	–			
6	Impact-proof	• max. impact acceleration : 147 m/s^2{15G} • Application time : 11ms • pulse wave type : semi-sine wave pulse (3 times each direction X, Y, Z)					IEC 61131-2
7	Noise-resistant	Square wave impulse noise	AC : ± 1,500 V, DC : ±900 V				LG 산전내부 시험규격기준
		Electrostatic discharge	Voltage : 4kV (Touch discharge)				IEC 61131-2, IEC 801-2
		Radiant electromagnetic field noise	27 ~ 500 MHz, 10 V/m				IEC 61131-2, IEC 801-3
		Fast Transient / Bust Noise	Classification	Power module	Digital I/O (more than 24V)	Digital I/O (below 24V) Analog I/O Communication Interface	IEC 61131-2 IEC 801-4
			Voltage	2kV	1kV	0.25kV	
8	Surrounding environment	No corrosive gas, no dust					
9	Use altitude	Less than 2,000m					
10	Pollution	Less than 2					
11	Cooling method	Natural air-conditioning					

Remark

1) IEC(International Electrotechnical Commission)
: International civil community that promotes international cooperation for standardization of electric/ electro technology, publishes international standard and operates suitability assessment system related to the abov.

2) Pollution Degree
: An index that indicates the pollution degree of used environment that determines the insulation performance of the device. For example, pollution degree 2 means the state to occur the pollution of non-electric conductivity generally, but the state to occur temporary electric conduction according to the formation of dew. .

2.2 Power Specification

Here describes the Power Specification of Smart I/O.

2.2.1 Performance Specification

Here describes Power Performance Specification of Smart I/O Profibus-DP(Pnet) module.

Items	Specification					
	GPL-TR2A	GPL-TR4A	GPL-RY2A	GPL-DT4A	GPL-D22A	GPL-D24A
Input power	DC +24V (Max +28V, Min +19V)					
Input current	0.4A(+24VDC)					
Dash current	Less than 40A : (24VDC input)					
Rated output current (+5V)	0.2~0.6A					
Rated output current (+5V, Aux)	0.02~0.1A					
Efficiency	More than 60% (in case of Full Load)					
Power indication	When power input, LED ON					
Output voltage dwell time	Within 150ms (DC19~24V input, Full Load)					
Suitable wire spec	1.5 ~ 2.5mm^2 (AWG16 ~ 22)					
Suitable tightening torque	12kg · cm					

Here describes Power Performance Specification of Smart I/O DeviceNet, Rnet, Modbus module.

Items	Specification					
	GD/R/SL-TR2A	GD/R/SL-TR4A	GD/R/SL-RY2A	GD/R/SL-DT4A	GD/R/SL-D22A	GD/R/SL-D24A
Input power	DC +24V (Max +28V, Min +19V)					
Input current	0.4A(+24VDC)					
Dash current	Less than 40A : (24VDC input)					
Rated output current (+5V)	0.2~0.6A					
Efficiency	More than 60% (in case of Full Load)					
Power indication	When power input, LED ON					
Output voltage dwell time	Within 150ms (DC19~24V input, Full Load)					
Suitable wire spec	1.5 ~ 2.5mm^2 (AWG16 ~ 22)					
Suitable tightening torque	12kg · cm					

2.3 Digital Input Module Specification

2.3.1 DC16 point Input Module : GPL/GDL/GRL/GSL-D22A

Type name / Spec.		DC input module
Input point		16 points
Insulation method		Photo coupler insulation
Rated input voltage		DC24V
Rated input current		7 mA
Use voltage range		DC20.4 ~ 28.8V (ripple rate : within 5%)
Max. simultaneous input point		100% (16 points/1COM) simultaneously ON
ON voltage / ON current		More than DC19V / more than 3.5 mA
OFF voltage / OFF current		Less than DC6V / less than 1.5 mA
Input resistance		Approx. 3.3 kΩ
Response time	Off → On	Less than 3 ms
	On → Off	Less than 3 ms
Common method		16 points / COM
Internal consumption current		Less than 200mA
Action indication		LED ON when input ON
External connection method		Terminal unit connector (M3 X 6 screws)
weight		Less than 160g

Circuit Configuration

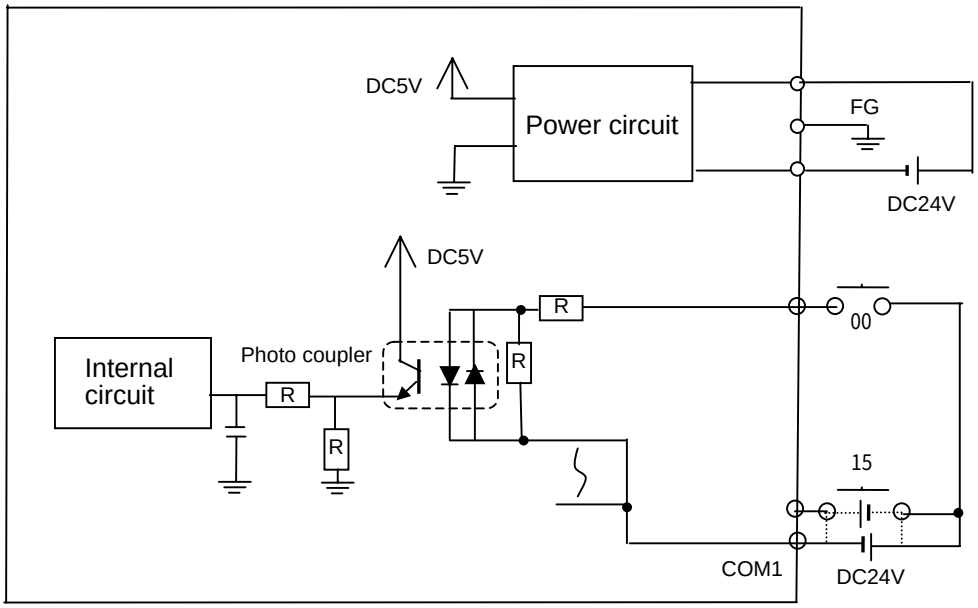

2.3.2 DC32 point Input Module : GPL/GDL/GRL/GSL-D24A

Spec. \ Type name		DC Input Module
Input point		32 points
Insulation method		Photo coupler insulation
Rated input voltage		DC24V
Rated input voltage		7 mA
Use voltage range		DC20.4 ~ 28.8V (ripple rate : within 5%)
Max. simultaneous input point		100% (16 points/1COM) simultaneously ON
ON voltage / ON current		More than DC19V / more than 3.5 mA
OFF voltage / OFF current		Less than DC6V / less than 1.5 mA
Input resistance		Approx. 3.3 kΩ
Response time	Off -> On	Less than 3 ms
	On - > Off	Less than 3 ms
Common method		16 points / COM
Internal consumption current		Less than 300 mA
Action indication		LED ON when input ON
External connection method		Terminal unit connector (M3 X 6 screws)
Weight		Less than 240g

Circuit Configuration

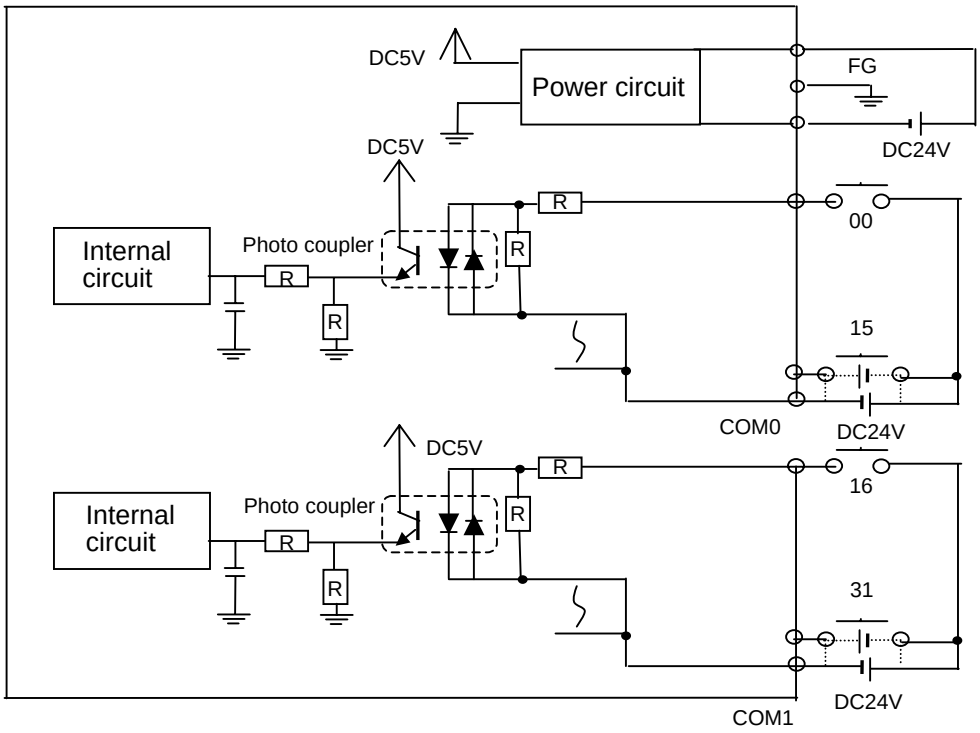

2.4 Digital Output Module Specification

2.4.1 16 point Relay Output Module : GPL/GDL/GRL/GSL-RY2A

Type name / Spec.		Relay Output Module
Output point		16 points
Insulation method		Relay insulation
Rated load voltage/current		DC24V 2A(resistance load) / 1point, AC220V 2A(COSΨ = 1)
Min.(max.) load voltage/current		DC5V / 1mA, AC250V, DC110V
Max. open/close frequency		1,200 times / hr
Surge killer		None
Life	Mechanical	More than 20,000,000 times
	Electrical	Rated load voltage/current more than 100,000 times
		AC200V / 1.5A, AC240V / 1A (COSΨ = 0.7) more than 100,000
		AC200V / 1A, AC240V / 0.5A (COSΨ = 0.35) more than 100,000
		DC24V / 1A, DC100V / 0.1A (L / R = 7ms) more than 100,000
Response time	Off → On	Less than 10 ms
	On → Off	Less than 12 ms
Common method		8 points / COM
Internal consumption current		Less than 550 mA (when all points ON)
Action indication		LED ON when output ON
External connection method		Terminal unit connector (M3 X 6 screws)
Weight		Less than 300g

Circuit Configuration

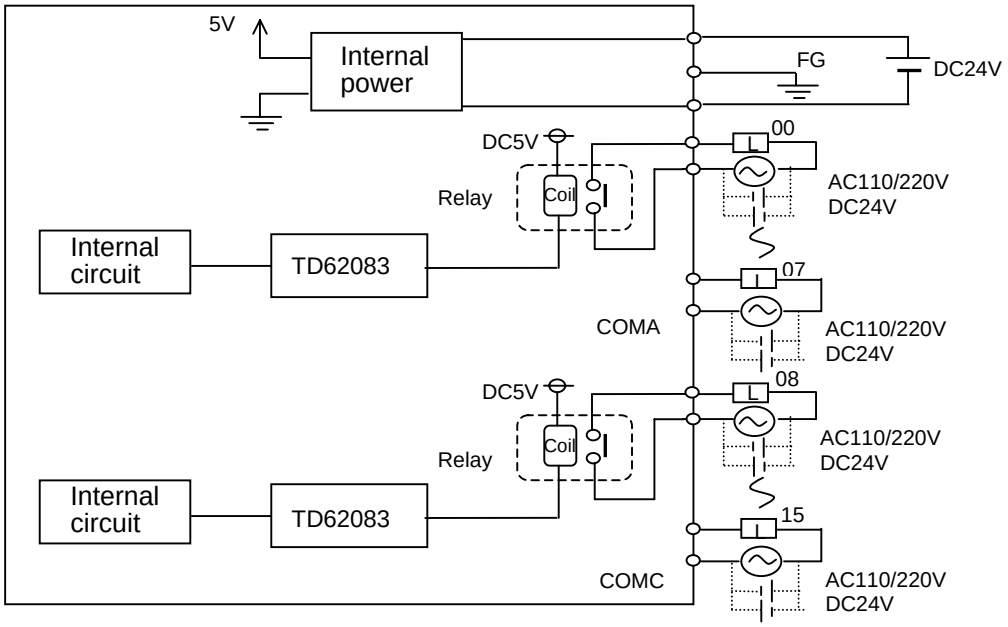

2.4.2 16 point Transistor Output Module : GPL/GDL/GRL/GSL-TR2A

Spec. \ Type name		Transistor Output Module
Output point		16 points
Insulation method		Photo coupler insulation
Rated load voltage		DC 24V
Use load voltage range		DC 20.4 ~ 26.4V
Max. load current		0.1A / 1point, 2A / 1COM
Leakage current when OFF		Less than 0.1mA
Max. inrush current		Less than 4A / 10 ms
Max. voltage falling when ON		DC 1.5V
Surge killer		Clamp diode
Response time	Off → On	Less than 2 ms
	On → Off	Less than 2 ms
Common method		16 points / 1COM
Internal consumption current		Less than 280 mA (when all points ON)
External power Supply	Voltage	DC24V ± 10% (ripple voltage : less than 4 Vp-p)
	current	Less than 50 mA (DC24V per 1COM)
Action indication		LED ON when output ON
External connection method		Terminal unit connector (M3 X 6 screws)
Weight		Less than 160g

Circuit Configuration

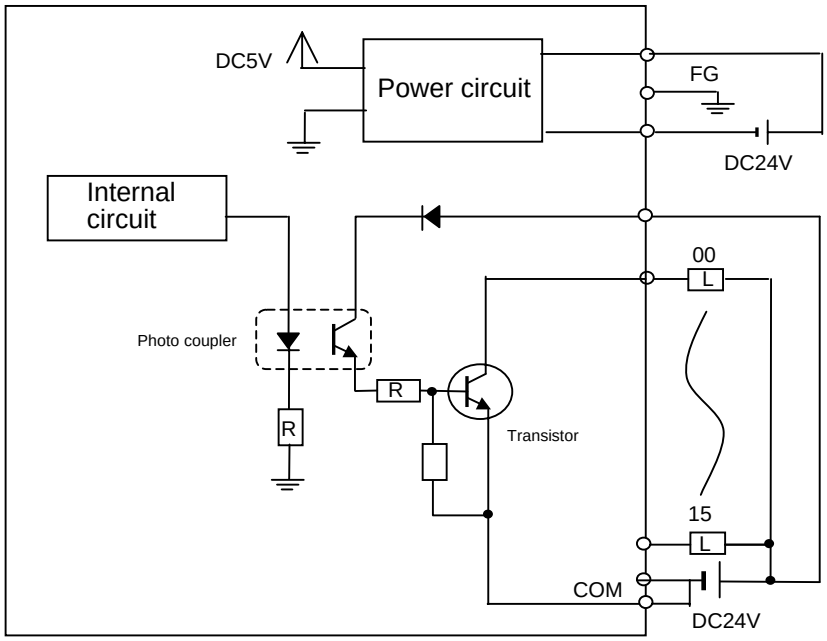

2.4.3 32 point Transistor Output Module : GPL/GDL/GRL/GSL-TR4A

Spec. \ Type name		Transistor Output Module
Output point		32 points
Insulation method		Photo coupler insulation
Rated load voltage		DC 24V
Use load voltage range		DC 20.4 ~ 26.4V
Max. load current		0.1A / 1point, 2A / 1COM
Leakage current when OFF		Less than 0.1 mA
Max. inrush current		Less than 0.4 A / 10 ms
Max. voltage falling when ON		DC 1.0 V
Response time	Off → On	Less than 2 ms
	On → Off	Less than 2 ms
Common method		16 points / 1 COM
Internal consumption current		Less than 380 mA (when all points ON)
External power supply	Voltage	DC 24V ± 10 % (ripple voltage : less than 4Vp-p)
	current	40 mA (DC 24V per 1 COM)
Action indication		LED ON when output ON (16 points indication conversion by selection switch)
External connection method		Terminal unit connector (M3 X 6 screws)
Weight		Less than 240g

Circuit Configuration

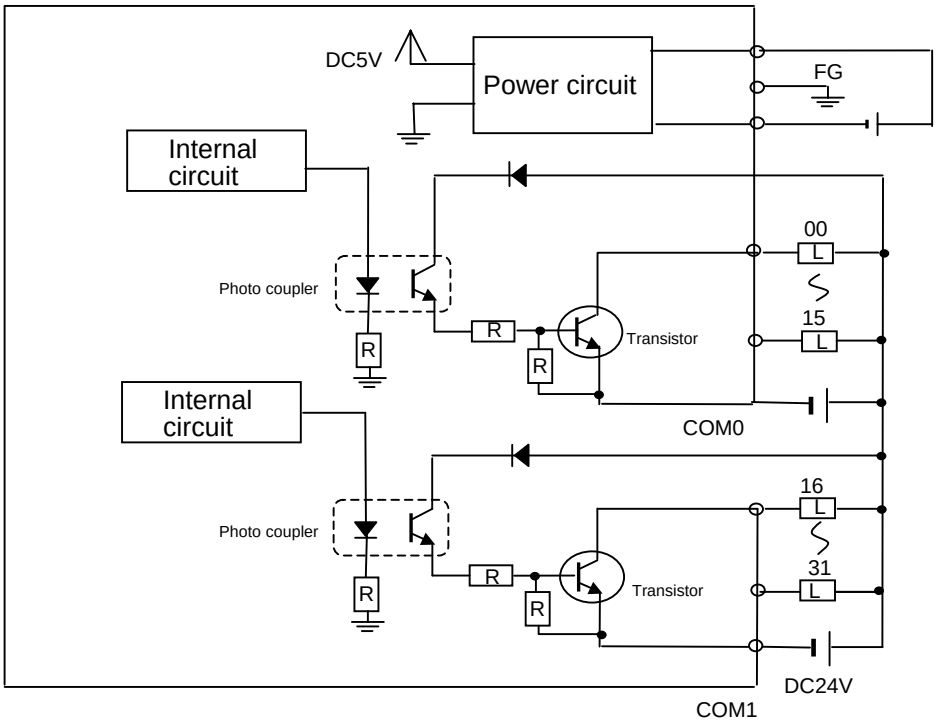

2.5 Digital I/O Combined Module Specification

2.5.1 32 point I/O Combined Module(DC16/TR16 point): GPL/GDL/GRL/GSL-DT4A

I/O Combined Module					
Input			Output		
Input point		16 point	Output point		16 point
Insulation method		Photo coupler insulation	Insulation method		Photo coupler insulation
Rated input voltage		DC 24V	Rated load voltage		DC24V
Rated input current		7 mA	Max. load current		0.1A/1point, 2A/1COM
Use voltage range		DC20.4~26.4V (ripple rate : within 5%)	Max. load voltage/current		AC250V, DC125V
Max. simultaneous input point		100% simultaneously ON	Leakage current when OFF		Less than 0.1 mA
ON voltage/ON current		DC19V/3.0 mA or more	Max. inrush current		Less than 4A/10ms
OFF voltage/OFF current		DC6V/1.5 mA or less	Surge killer		none
Input resistance		Approx. 3.3 kΩ	Response time	Off → On	Less than 2 ms
Response time	Off→ On	Less than 3 ms		On → Off	Less than 2 ms
	On → Off	Less than 3 ms			
Common method		16 points / COM	Common method		16 points / 1COM
Action indication		LED ON when input ON	Action indication		LED ON when output ON
External connection method		Terminal unit connector (M3×6 screws)			
Internal consumption current		Less than 350 mA			
Weight		Less than 240g			

Circuit Configuration

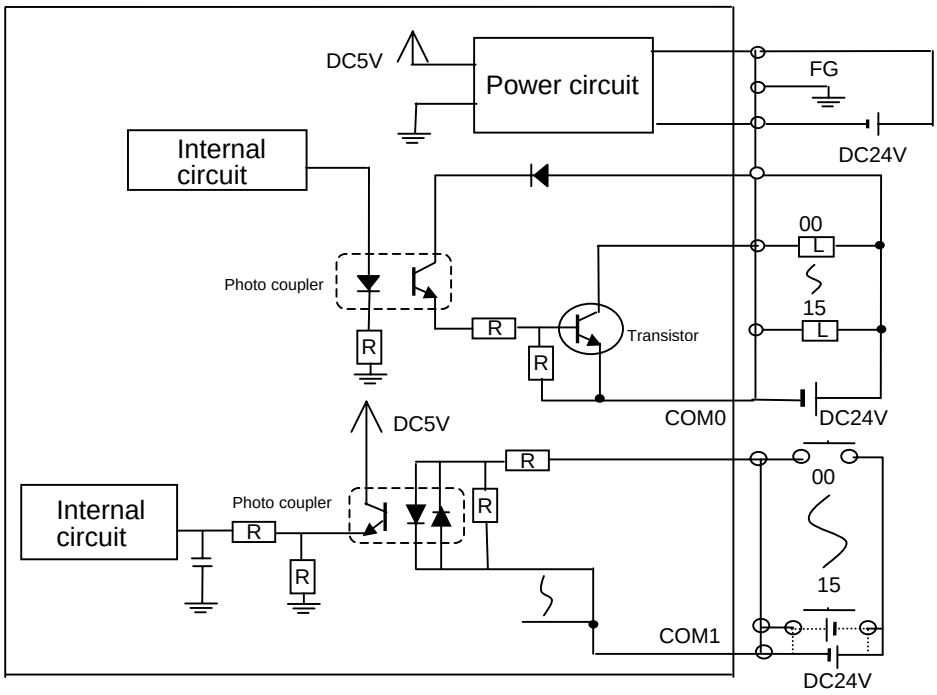

2.6 Communication Module Specification

2.6.1 Profibus-DP Module Specification

Classification	Profibus-DP
Module Type	Remote slave
Standard	EN 50170 / DIN 19245
Interface	RS-485(Electric)
Medium Access	POLL
Topology	BUS
Encoding method	NRZ
Cable	Shielded Twisted Pair
Communication distance	1200m (9.6K ~187Kbps)
	400m (500 Kbps)
	200m (1.5 Mbps)
	100m (3M ~ 12Mbps)
Max. node	126 stations
Max. node (per segment)	32 stations
Max. I/O data	64Byte

2.6.2 DeviceNet Module Specification

Classification		DeviceNet
Module type		Remote slave
Protocol		CAN Protocol
Medium Access		POLL
Topology		BUS
Cable		Class 2 Thick/Thin Cable(Allen-Bradley standard)
Communication speed		125/250/500 kbps
Communication distance(Thick)		500/250/100 m
Max. drop length	125 kbps	6m(max. extension 156m)
	250 kbps	6m(max. extension 78m)
	500 kbps	6m(max. extension 39m)
Data packet		0 ~ 8 Byte(64 Bits)
Network structure		• Trunk/drop line • Power within same network/ signal cable
Bus method		• Multi slave/ multi casting • Peer-to-Peer method • Strobe,Poll,COS/Cyclic method
Max. node		Max. 64 MAC ID 32 I/O per node (max. 2,048 I/O)
System type		Node insertion/removal in voltage ON
Action voltage		DC 24V

2.6.3 Rnet Module Specification

Classification	Rnet
Allowable inspection power cut time	20ms
Communication speed	1Mbps
Communication method	Semi dual bit serial method
Synchronous method	Frame synchronous method
Transmission path method	BUS
Total extension distance	750m
No. of connecting station	64 stations (including master stations)
Modulation method	Manchester Biphase-L
Error control method	Retry by CRC-CCITT and Time Over
Connector connection	9-PIN plug type
Using cable	TWISTED PAIR SHIELDED CABLE
Max. communication point	3,840 Word (master base)
Max. sending point	1,920 Word(master base)
Max. block no. assignment	63
Max. point of Block unit	60 Word

2.6.4 Modbus Module Specification

Classification	Snet
Module type	Remote slave
Protocol	Modbus-RTU
Max. protocol size	8 Byte
Topology	BUS
Cable	TWISTED PAIR SHIELDED CABLE
Communication speed	2400 ~ 38,400 BPS
Communication distance	1 Km
Medium Access	POLL
Max. node	32 stations
Communication point	32 points

2.7 Communication Cable Specification

2.7.1 Profibus-DP Cable Specification

- Belden Network Cable
  Type : Network Components
  Protocol : FMS-DP-PA
  Certification : No
  Order No. : 3076F, 3077F, 3079A

Classification	Twinax	
AWG	22	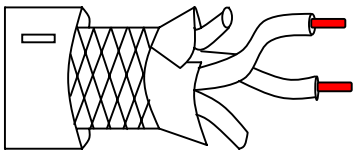
Type	BC-Bare Copper	
Insulation	PE-Polyethylen	
Insulation strength	0.035 (Inch)	
Shield	Aluminum Foil- Polyester Tape/Braid Shield	
Capacitance	8500 pF/ft	
Characteristic impedance	150Ω	
Number of core wire	2 Core	

2.7.2 DeviceNet Cable Specification

- **Cable Specification**

Type name	Class 2 Thick/Thin Cable	
Maker	Allen-Bradley	Trunk/ drop Simultaneous use
Cable type	Round	
Rated output voltage	30V/100VA	
Max. allowable current	100VA/24V or 4A	
External diameter	12.2mm/6.9mm	
Number of core wire	5 cores	

Class 2 Thick Cable
Spool Size
50m
150m
300m
500m

Class 2 Thin Cable
Spool Size
50m
150m
300m
600m

- **Cable Signal Name**

Smart I/O Dnet I/F module cable have 5 cores as follows. It is composed of Twist pair cable for DC 24V power supply, twist pair cable for signal cable, shield cable etc. and both Thick and Thin cable are available for trunk/drop line.

Cble color	Signal name	Description
While	CAN_H	Signal cable
Blue	CAN_L	Signal cable
Bare	Drain	Shield cable
Black	V-	Power cable
Red	V+	Power cable

- **Max. transmission distance by Cable types**

Transmission speed	Max. distance	
	Thick cable	Thin cable
125kbps	500m	100m
250kbps	250m	100m
500kbps	100m	100m

<STRUCTURE>

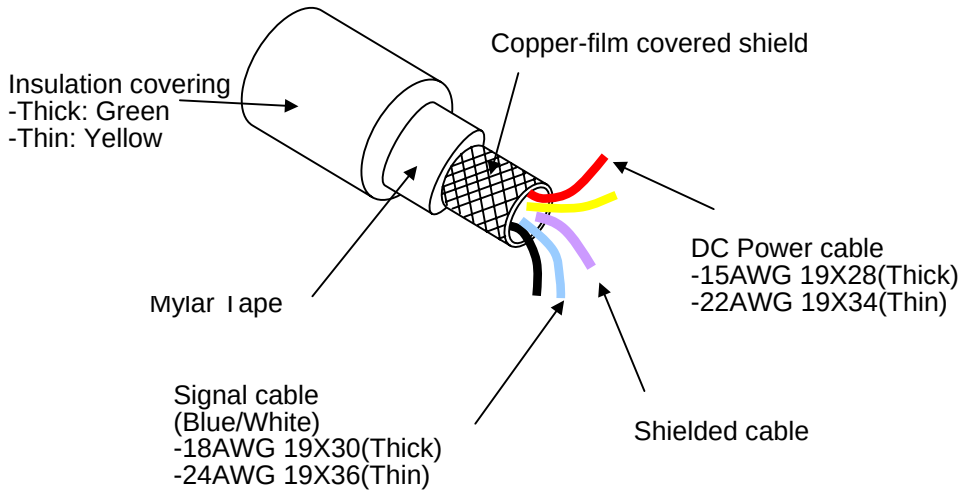
Copper-film covered shield
Insulation covering
-Thick: Green
-Thin: Yellow
DC Power cable
-15AWG 19X28(Thick)
-22AWG 19X34(Thin)
Mylar Tape
Signal cable
(Blue/White)
-18AWG 19X30(Thick)
-24AWG 19X36(Thin)
Shielded cable

2.7.3 Rnet Cable Specification

- **Twist Pair Cable**

Cable Description			
Product name	Low Capacitance Lan Interface Cable		
Type name	LIREV-AMESB		
Specification	2*0.64 mm (GS 92-3032,22 AWG)		
Maker	LG Cable		
Electric characteristics			
Items	Unit	Characteristics	Test condition
Conductor resistance	Ω/km	Less than 59	Normal temp.
Voltage-resistance(DC)	V/min	500V 1 min resist	In air
Insulation resistance	MEGA Ω-km	More than 1,000	Normal temp.
Capacitance	pF/m	Less than 45	1 kHz
Characteristic impedance	Ω	120 ± 12	10MHz

Appearance characteristics			
Conductor	No. of core wire	CORE	2
	Spec.	AWG	18
	Composition	NO./mm	1/1.0
	Outside diameter	mm	1.0
Insulator	Thickness	mm	0.9
	Outside diameter	mm	2.8

● Structure Diagram

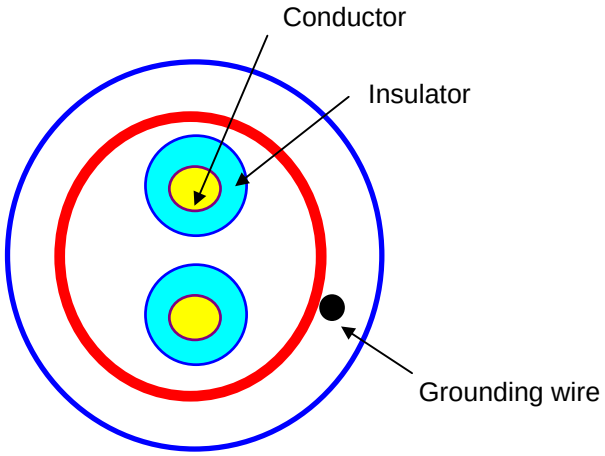

2.7.4 Modbus Cable Specification

In case of Modbus communication using RS-422 channel, it is required to use Twist Pair Cable for RS-422 considering communication distance and communication speed. The table below shows the specification of recommended cable. In case of using other cables, it is required to use the cable suitable for the following characteristics.

√ Product name : Low Capacitance Lan Interface Cable
√ Type name : LIREV-AMESB
√ Spec. : 2P X 22AWG(D/0.254 TA)
√ Maker : LG Cable
√

Twist Pair Cable Specification

1) Electric Characteristic

Test Items	Unit	Characteristics	Test condition
Conductor resistance	Ω/km	Less than 59	Normal temp.
Voltage-resistance(DC)	V/1min	500V 1 min resist	In air
Insulation resistance	MΩ-km	More than 1,000	Normal temp.
Capacitance	Pf/M	Less than 45	1kHz
Characteristics impedance	Ω	120 ± 12	10MHz

2) Appearance Characteristic

Items			Single Wire
Conductor	No. of core wire	Pair	2
	Spec.	AWG	22
	Composition	NO./mm	1/0.643
	Outside diameter	Mm	0.643
Insulator	Thickness	Mm	0.59
	Outside diameter	Mm	1.94

* Structure Diagram

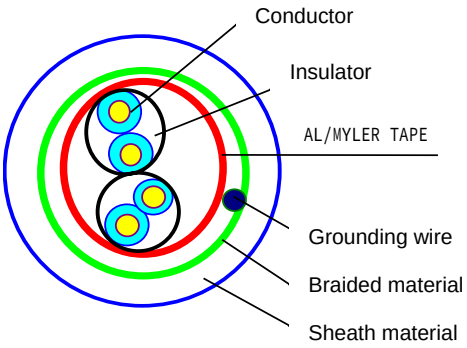

2.8 Terminating

2.8.1 Profibus-DP Terminating

- Connection Connector

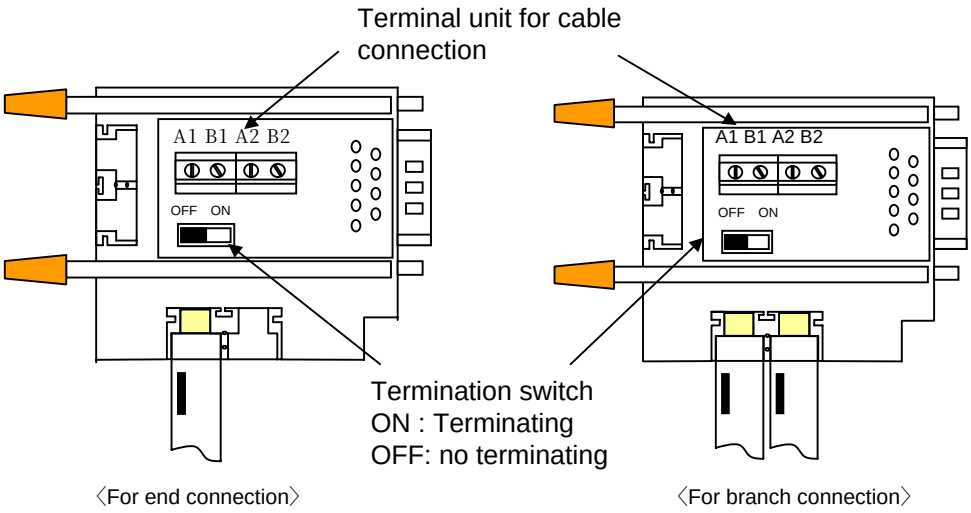

2.8.2 DeviceNet Terminating

- **Terminal resistance**
  - 121Ω, 1%, 1/4W resistance should be added.
  - Connected to CAN_H of connector and CAN_L signal cable

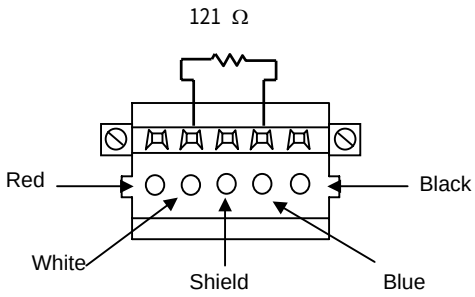

Remark

1) Terminal resistance should be added to both end of trunk line of network and in case of composing by device port tab, it is required to install terminal resistance on both ends of tab. In case that terminal resistance is omitted, the normal communication is not available.

2.8.3 Rnet Terminating

Signal cable for electric network connection for Smart I/O Rnet uses no.6 and 7 from connector pin of Rnet master module and no.8 and 9 of Smart I/O module.
No.6 signal of master module Is connected to no.8 signal cable of Smart I/O module and no.7 signal is connected to no.9 signal cable respectively.
As each connector body is connected to other module by shield cable which plays the role to bypass the external noise, the connector bodies of both side should be connected by shield cable and the body of cable connector is not allowed to contact to high voltage and high current cables.

When soldering the shield cable to 9 pin connector body, it is required to heat the connector body with soldering iron sufficiently for strict and non removable soldering. In case of soldering, use the suitable amount of solder as too much solder adding makes the assembly of connector case difficult.

- Resistance value : 110Ω, 1/2W
- Connection pin no.
  - Master connection section : Pin no.6, 7
  - Smart I/O connection section : Pin no.8, 9

- Terminal resistance as fittings(110Ω, 1/2W) should be added on both ends of network.
- Connector case and end resistance are not allowed to contact each other.

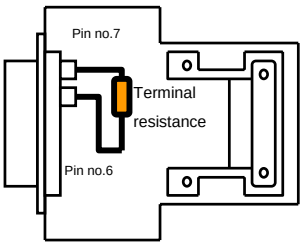

Master connection

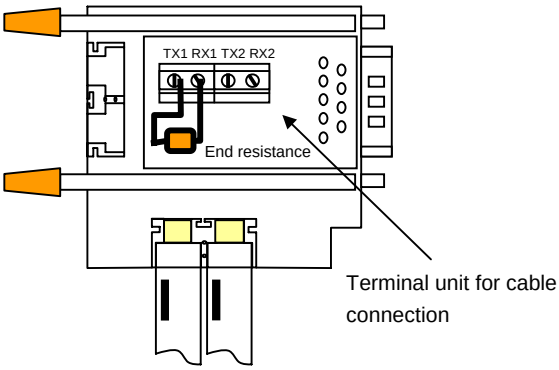

Smart I/O connection

2.8.4 Modbus Terminating

In case of communicating through RS-422 channel, it should be required to connect the terminal resistance from outside. In case of long distance communication, terminal resistance plays the role to prevent the signal distortion caused by reflection wave of cable and is required to connect the resistance (1/2W) same as characteristic impedance value to the end of network. In case of using the recommended cable, please connect 120Ω terminal resistance to both end of cable. In case of using other cables except the recommended cable, it is required to connect the 1/2W resistance same as the characteristic impedance value of using cable to both sides of cable.

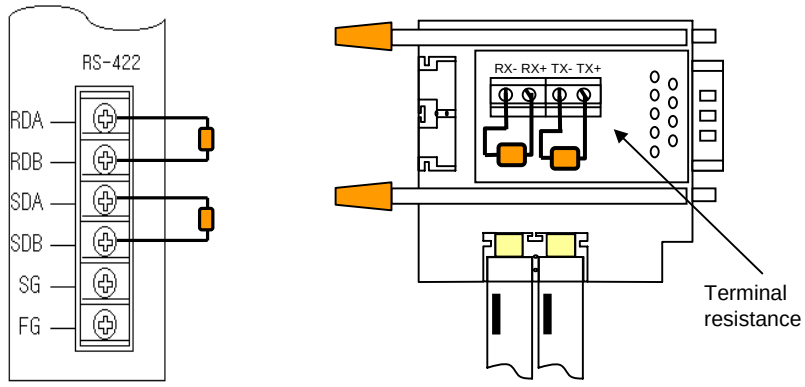

Master connection

Smart I/O connection

Chapter 3 System Configuration

Smart I/O series is equipped with various product suitable for system configuration as various communication models and I/O module. This chapter describes the method of system configuration and characteristics.

3.1 Notices in Selecting Module

Here describes the notices in selecting digital I/O module which is used for Remote I/O.

1) Digital input types contain the current sink input and current source input. In case of DC input module, as the wiring method of external input power is different according to such input types, make sure of selecting the input module considering the spec. of input connection machine. Remote I/O is available for source/sink in common. The wiring method per type is as follows.

(1) How to connect the sink type external connection machine to the source type DC input module.

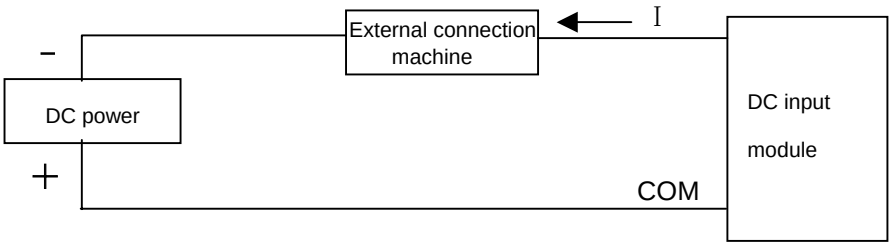

- External connection machine is located between DC power and (-) terminal of DC input module terminal.
- Thus, when input ON, the current flows from DC input module terminal to external connection machine.

(2) How to connect the source type external connection machine to the sink type DC input module.

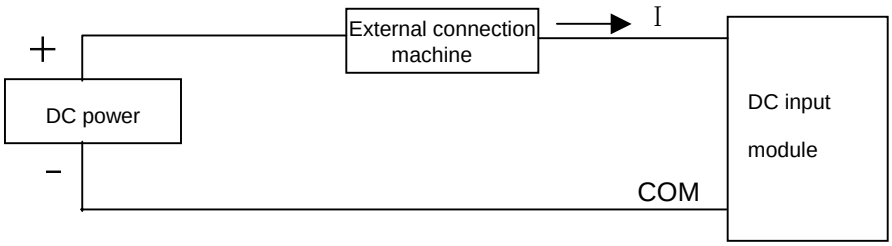

- External connection machine is located between DC power and (+) terminal of DC input module terminal.
- Thus, when input ON, the current flows from external connection machine to DC input module terminal.

2) In case that the open/close frequency is high or it is used to open/close the conductive load, please use transistor output module as Relay output module may reduce the life.

3.2 Names of Each Part

3.2.1 Basic System Configuration

Smart I/O series contains all 4 kinds of module configuration. According to network configuration that the user wants, it is available to install the system simple and effectively by the combination of the following models. The best advantage of Smart I/O series is the simple system configuration and the easy connection with other maker's machine as this is oriented to the open type network (except Rnet).

Example of Smart I/O Series Form

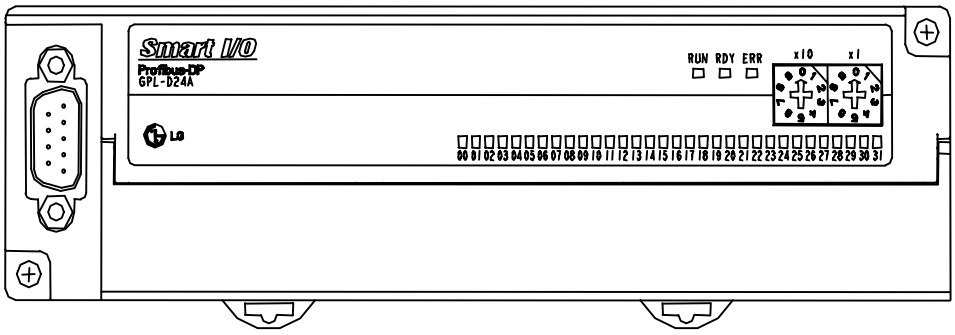

Available modules per network of Smart I/O series (I/O module)

I/O configuration available point		16 points or 32 points
Product type	Profibus-DP Communication module	• GPL-TR2A / GPL-TR4A / GPL-RY2A • GPL-D22A / GPL-D24A • GPL-DT4A
	DeviceNet Communication module	• GDL-TR2A / GDL-TR4A / GDL-RY2A • GDL-D22A / GDL-D24A • GDL-DT4A
	Rnet Communication module	• GRL-TR2A / GRL-TR4A / GRL-RY2A • GRL-D22A / GRL-D24A • GRL-DT4A
	Modbus Communication module	• GSL-TR2A / GSL-TR4A / GSL-RY2A • GSL-D22A / GSL-D24A • GSL-DT4A

3.2.2 Names of Each Part of Smart I/O series

3.2.2.1 Profibus-DP, Rnet, Modbus series

Profibus-DP, Rnet, Modbus communication module has all same forms and their characteristics are as follows.

In case of I/O 16 points

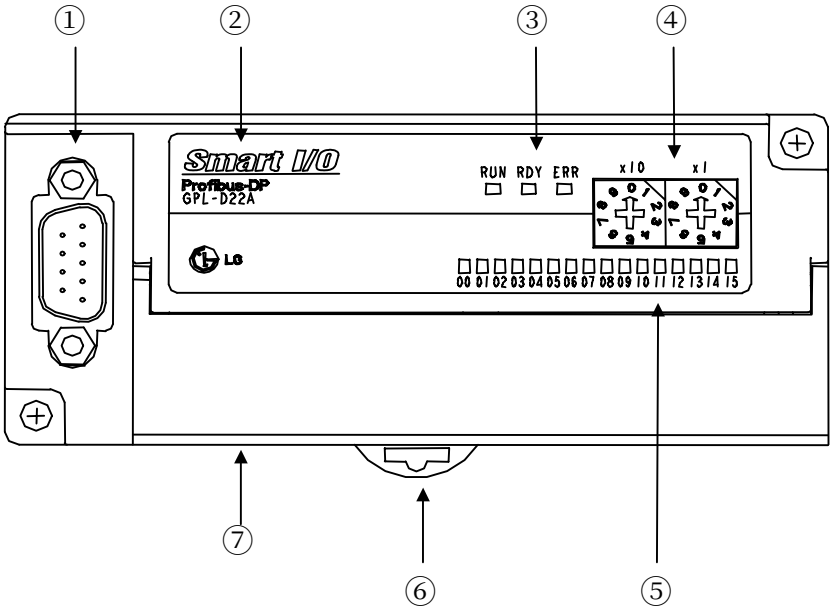

In case of I/O 32 points,

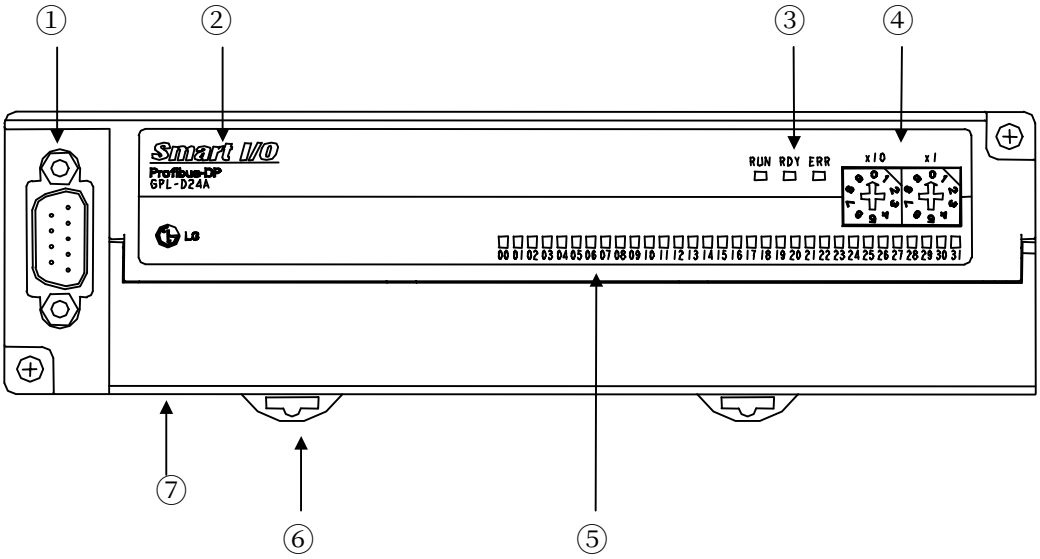

1) Profibus-DP module

No.	Item		Dscription
①	Connection connector		Connector for communication connection with master/remote unit • 9 pin connector
②	Smart I/O type name indication		• Describes Profibus-DP module type name. GPL-D22A : DC input 16 points GPL-D24A : DC input 32 points GPL-TR2A : TR output 16 points GPL-TR4A : TR output 32 points GPL-RY2A : Relay output 16 points GPL-DT4A : DC input 16 points /TR output 16 points combined
③	Communi-cation status indication LED	RUN LED	It describes the status of power to be supplied to the system. • On : in case of normal power supply • Off : in case of abnormal power supply
		RDY LED	• ON : when communication module is working normally.
		ERR LED	• ON : when communication module is cut off.
④	station no. of its own station setting switch		The switch to set the node station no. of its own station. Available to set from 0~99 (‘0 ‘station reserved) • X10 : 10 digits indicated • X1 : 1 digit indicated
⑤	I/O LED		It describes the contact status of I/O terminal.
⑥	Hook for DIN rail attachment		• Hook for DIN rail attachment
⑦	Terminal block		• Terminal block layout for I/O wiring * Refer to Art.3.3.

2) Rnet module

No.	Item		Dscription
①	Connection connector		Connector for communication connection with master/remote unit • 9 pin connector
②	Smart I/O type name indication		• Describes Rnet module type name. GRL-D22A : DC input 16 points GRL-D24A : DC input 32 points GRL-TR2A : TR output 16 points GRL-TR4A : TR output 32 points GRL-RY2A : Relay output 16 points GRL-DT4A : DC input 16 points/TR output 16 points combined
③	Communi-cation status indication LED	PWR LED	It describes the status of power to be supplied to the system. • On : in case of normal power supply • Off : in case of abnormal power supply
		TX LED	It describes the transmission status of communication module. • Blink : when communication module is transmitting (except GRL-TR4A) • OFF : LED is OFF in the cases as follows ; ▶ in case that the voltage is not supplied normally to the basic unit. ▶ in case that the error to stop the operation is detected.
		RX LED	It describes the receiving status of communication module. • Blink : when communication module is receiving. • Off : when communication module has no receiving or the error is detected.
④	Station no. of its own station setting switch		The switch to set the node station no. of its own station. Available to set from 0~63. • X16 : 16 digits indicated • X1 : 1 digit indicated
⑤	I/O LED		Describes the contact status of I/O terminal.
⑥	Hook for DIN rail attachment		• Hook for DIN rail attachment
⑦	Terminal block		• Terminal block layout for I/O wiring. * Refer to Art. 3.3.

3) Modbus module

No.	Item		Dscription
①	Connection connector		Connector for communication connection with master/remote unit • 9 pin connector
②	Smart I/O type name indication		• Describes Modbus module type name. GSL-D22A : DC input 16 points GSL-D24A : DC input 32 points GSL-TR2A : TR output 16 points GSL-TR4A : TR output 32 points GSL-RY2A : Relay output 16 points GSL-DT4A : DC input 16 points/TR output 16 points combined
③	Communi-cation status indication LED	PWR LED	It describes the status of power to be supplied to the system. • On : in case of normal power supply • Off : in case of abnormal power supply
		TX LED	It describes the transmission status of communication module. • Blink : when communication module is transmitting (except GRL-TR4A) • OFF : LED is OFF in the cases as follows ; ▶ in case that the voltage is not supplied normally to the basic unit. ▶ in case that the error to stop the operation is detected.
		RX LED	It describes the receiving status of communication module. • Blink : when communication module is receiving. • Off : when communication module has no receiving or the error is detected.
④	Station no. of its own station setting switch		The switch to set the node station no. of its own station. Available to set from 0~31. • X16 : 16 digits indicated • X1 : 1 digit indicated
⑤	I/O LED		It describes the contact status of I/O terminal.
⑥	Hook for DIN rail attachment		• Hook for DIN rail attachment
⑦	Terminal block		• Terminal block layout for I/O wiring * Refer to Art. 3.3.

3.2.2.2 DeviceNet Series

The form of DeviceNet communication module is as follows.

In case of I/O 16 points,

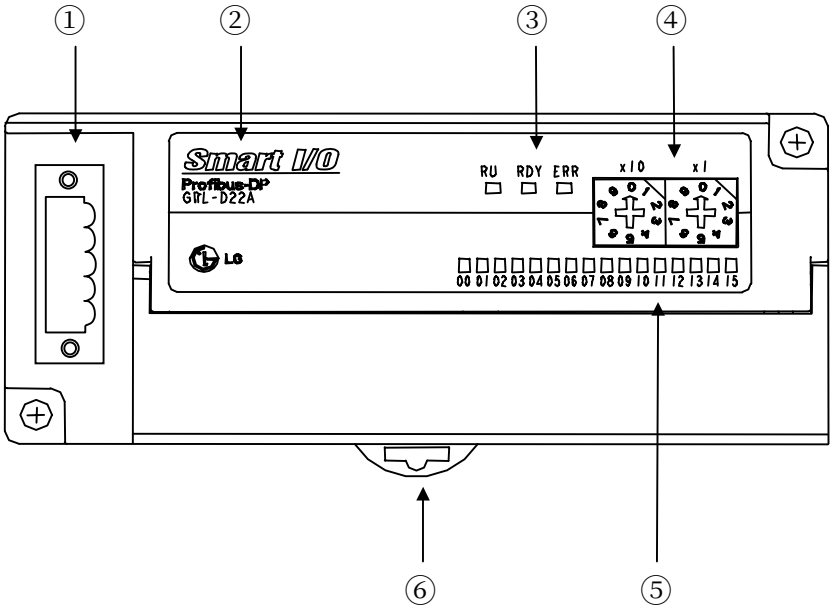

In case of I/O 32 points,

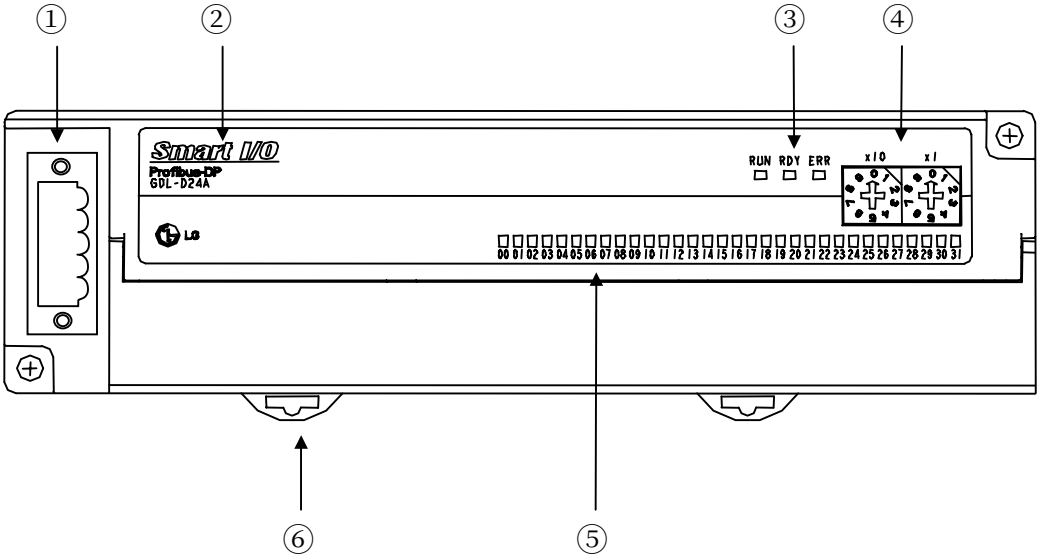

1) DeviceNet module

No.	Item		Dscription
①	Connection connector		Connector for communication connection with master/remote unit • 5 pin OPEN type connector
②	Smart I/O type name indication		• Describes DeviceNet module type name. GDL-D22A : DC input 16 points GDL-D24A : DC input 32 points GDL-TR2A : TR output 16 points GDL-TR4A : TR output 32 points GDL-RY2A : Relay output 16 points GDL-DT4A : DC input 16 points/TR output 16 points combined
③	Communi-cation status indication LED	PWR LED	It describes the status of power to be supplied to the system. • On : in case of normal power supply • Off : in case of abnormal power supply
		MS LED	It describes interface status of communication module. • Blink : when communication module is in normal interface with CPU. • OFF : Interface error
		NS LED	It describes network status of communication module. • Blink : when it is in normal interface with other machine.
④	Station no. of its own station setting switch		The switch to set the node station no. of its own station. Available to set from 0~63. • X16 : 16 digits indicated • X1 : 1 digit indicated
⑤	I/O LED		It describes the contact status of I/O terminal.
⑥	Hook for DIN rail attachment		• Hook for DIN rail attachment
⑦	Terminal block		• Terminal block layout for I/O wiring * Refer to Art. 3.3.

3.3 I/O Wiring Diagram of Communication Module

3.3.1 External connection diagram of Smart I/O module

3.3.1.1 Profibus-DP module

1) Terminal block configuration

Terminal block		Contact and Power Input
GPL-D22A / GPL-D24A	0 ~ 15	Input contact terminal (GPL-D22A)
	0 ~ 31	Input contact terminal (GPL-D24A)
	COM	Common terminal(16 points COM)(GPL-D22A)
	COM0/COM1	Common terminal(16 points COM)(GPL-D24A)
	FG	FG terminal
	DC 24V	DC 24V(+) power input terminal
	DC 24G	DC 24V(-) power input terminal
GPL-DT4A	0 ~ 15/0 ~ 15	I/O contact terminal
	COM0/COM1	Common terminal(16 points COM)
	FG	FG terminal
	DC 24V	DC 24V(+) power input terminal
	DC 24G	DC 24V(-) power input terminal
GPL-TR2A / GPL-TR4A	0 ~ 15	Output contact terminal(GPL-TR2A)
	0 ~ 31	Output contact terminal(GPL-TR4A)
	COM	Common terminal(16 points COM)(GPL-TR2A)
	COM0/COM1	Common terminal(16 points COM)(GPL-TR4A)
	FG	FG terminal
	24V	DC 24V(+) power input terminal
	24G	DC 24V(-) power input terminal
GPL-RY2A	0 ~ 15	Output contact terminal
	COMA~COMD	Common terminal(8 points COM)
	FG	FG terminal
	DC 24V	DC 24V(+) power input terminal
	DC 24G	DC 24V(-) power input terminal

2) Wiring Diagram

Classification	Wiring Diagram
DC input module	[GPL-D22A] [GPL-D24A] [GPL-DT4A(input section)] 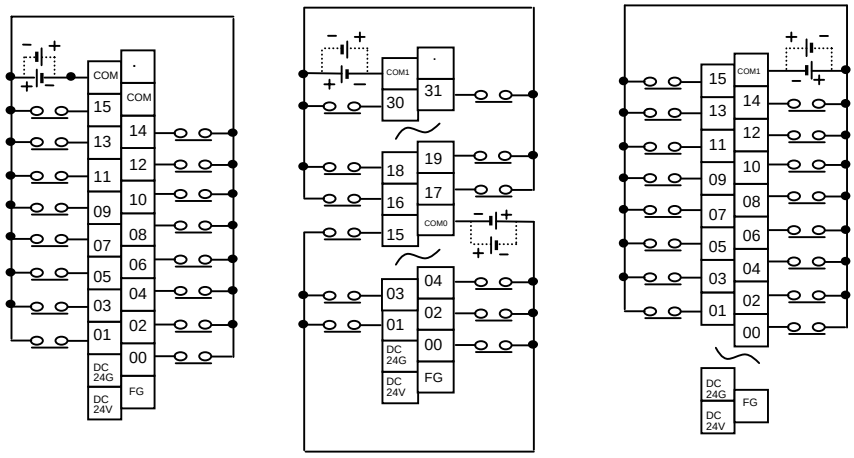
TR output module	[GPL-TR2A] [GPL-TR4A] [GPL-DT4A(Output section)] 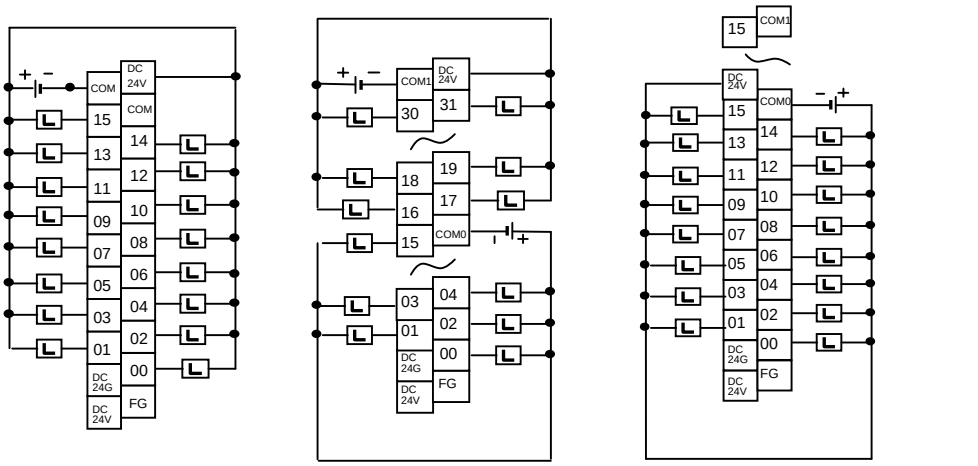
RELAY Output module	[GPL-RY2A] 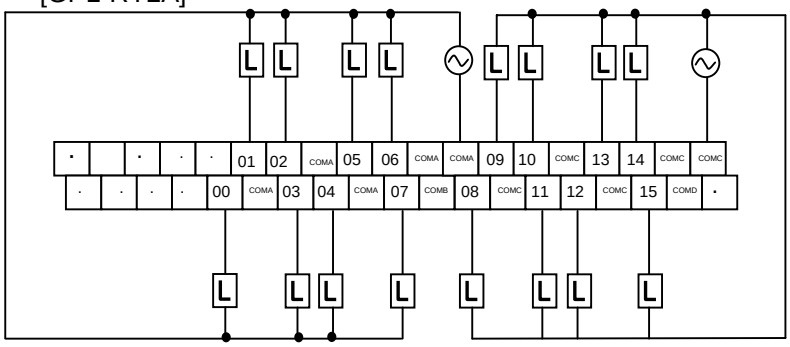 * COMA and COMB are connected internally respectively.

3.3.1.2 DeviceNet module

1) Terminal block configuration

Terminal block		Contact and Power Input
GDL-D22A / GDL-D24A	0 ~ 15	Input contact terminal(GDL-D22A)
	0 ~ 31	Input contact terminal(GDL-D24A)
	COM	Common terminal(16 points COM)(GDL-D22A)
	COM0/COM1	Common terminal(16 points COM)(GDL-D24A)
GDL-DT4A	0 ~ 15/0 ~ 15	I/O contact terminal
	COM0/COM1	Common terminal(16 points COM)
GDL-TR2A / GDL-TR4A	0 ~ 15	Output contact terminal(GDL-TR2A)
	0 ~ 31	Output contact terminal(GDL-TR4A)
	COM	Common terminal(16 points COM)(GDL-TR2A)
	COM0/COM1	Common terminal(16 points COM)(GDL-TR4A)
GDL-RY2A	0 ~ 15	Output contact terminal
	COMA~COMD	Common terminal(8 points COM)

2) Wiring diagram

Classification	Wiring diagram
DC input module	[GDL-D22A] [GDL-D24A] [GDL-DT4A(input section)] 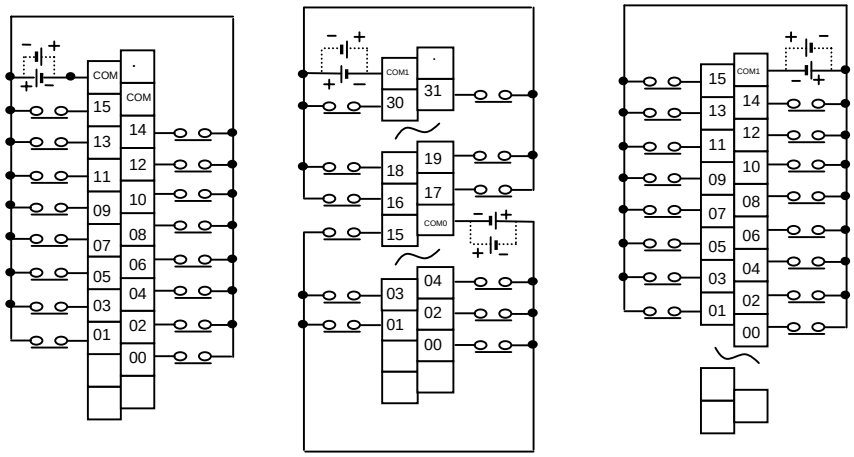
TR output module	[GDL-TR2A] [GDL-TR4A] [GDL-DT4A(output section)] 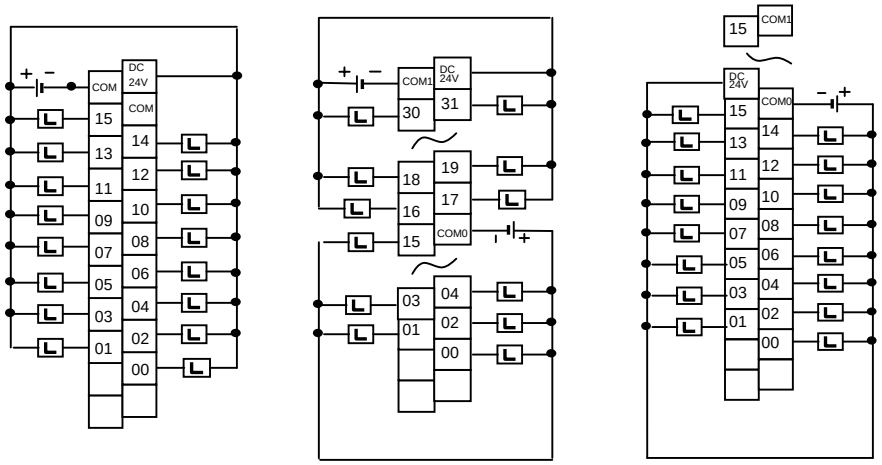
RELAY Output module	[GDL-RY2A] 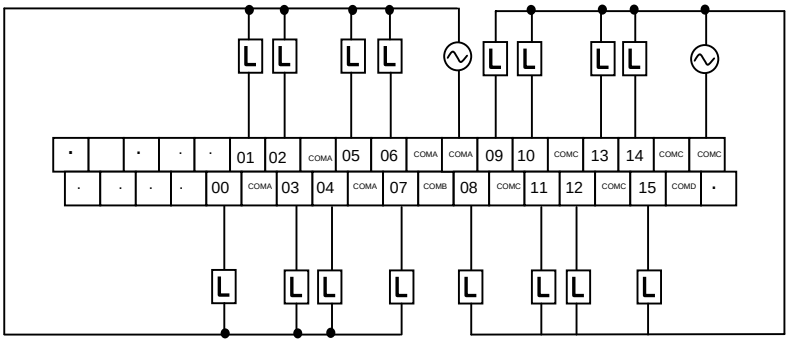 * COMA and COMB are connected internally respectively.

3.3.1.3 Rnet module

1) Terminal block configuration

Terminal block		Contact and Power Input
GRL-D22A / GRL-D24A	0 ~ 15	Input contact terminal(GRL-D22A)
	0 ~ 31	Input contact terminal(GRL-D24A)
	COM	Common terminal(16 points COM)(GRL-D22A)
	COM0/COM1	Common terminal(16 points COM)(GRL-D24A)
	FG	FG terminal
	DC 24V	DC 24V(+) power input terminal
	DC 24G	DC 24V(-) power input terminal
GRL-DT4A	0 ~ 15/0 ~ 15	I/O contact terminal
	COM0/COM1	Common terminal(16 points COM)
	FG	FG terminal
	DC 24V	DC 24V(+) power input terminal
	DC 24G	DC 24V(-) power input terminal
GRL-TR2A / GRL-TR4A	0 ~ 15	Output contact terminal(GRL-TR2A)
	0 ~ 31	Output contact terminal(GRL-TR4A)
	COM	Common terminal(16 points COM)(GRL-TR2A)
	COM0/COM1	Common terminal(16 points COM)(GRL-TR4A)
	FG	FG terminal
	24V	DC 24V(+) power input terminal
	24G	DC 24V(-) power input terminal
GRL-RY2A	0 ~ 15	Output contact terminal
	COMA~COMD	Common terminal(8 points COM)
	FG	FG terminal
	DC 24V	DC 24V(+) power input terminal
	DC 24G	DC 24V(-) power input terminal

2) Wiring diagram

Classification	Wiring diagram
DC input module	[GRL-D22A] [GRL-D24A] [GRL-DT4A(input section)] 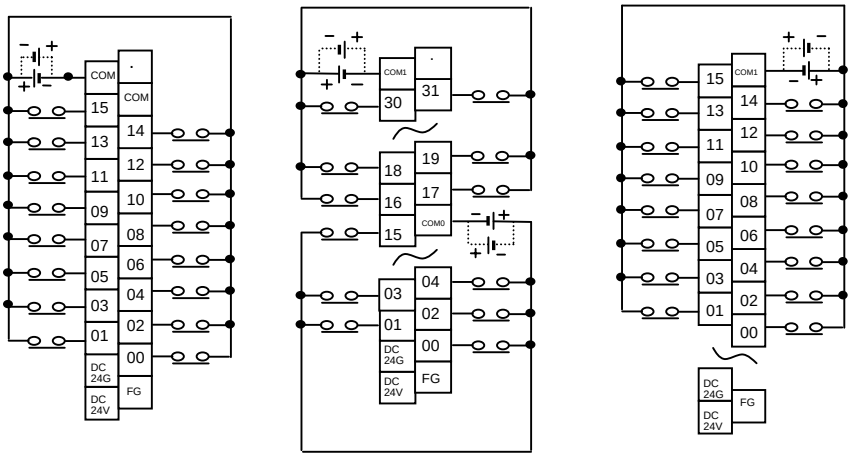
TR output module	[GRL-TR2A] [GRL-TR4A] [GRL-DT4A(output section)] 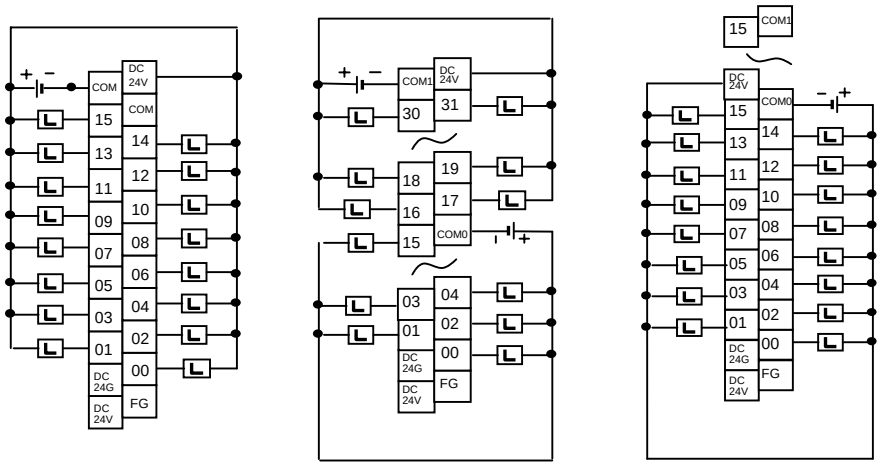
RELAY Output module	[GRL-RY2A] 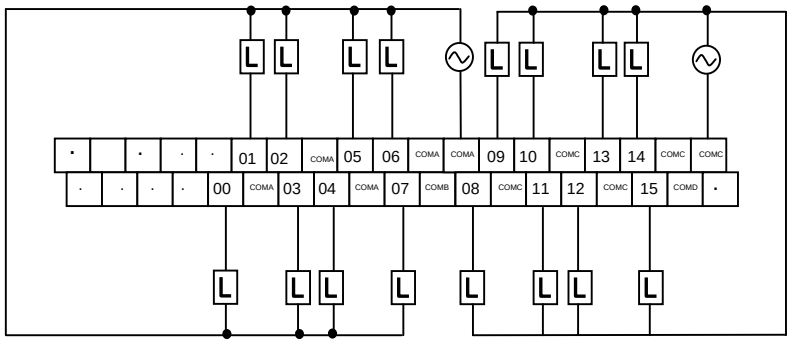 * COMA and COMB are connected internally respectively.

3.3.1.4 Modbus module

1) Terminal block configuration

Terminal block		Contact and Power Input
GSL-D22A / GSL-D24A	0 ~ 15	Input contact terminal(GSL-D22A)
	0 ~ 31	Input contact terminal(GSL-D24A)
	COM	Common input(16 points COM)(GSL-D22A)
	COM0/COM1	Common input(16 points COM)(GSL-D24A)
	FG	FG terminal
	DC 24V	DC 24V(+) power input terminal
	DC 24G	DC 24V(-) power input terminal
GSL-DT4A	0 ~ 15/0 ~ 15	I/O contact terminal
	COM0/COM1	Common terminal(16 points COM)
	FG	FG terminal
	DC 24V	DC 24V(+) power input terminal
	DC 24G	DC 24V(-) power input terminal
GSL-TR2A / GSL-TR4A	0 ~ 15	Output contact terminal(GSL-TR2A)
	0 ~ 31	Output contact terminal(GSL-TR4A)
	COM	Common terminal(16 points COM)(GSL-TR2A)
	COM0/COM1	Common terminal(16 points COM)(GSL-TR4A)
	FG	FG terminal
	24V	DC 24V(+) power input terminal
	24G	DC 24V(-) power input terminal
GSL-RY2A	0 ~ 15	Output contact terminal
	COMA~COMD	Common terminal(8 points COM)
	FG	FG terminal
	DC 24V	DC 24V(+) power input terminal
	DC 24G	DC 24V(-) power input terminal

2) Wiring diagram

Classification	Wiring diagram
DC input module	[GSL-D22A] [GSL-D24A] [GSL-DT4A(input section)] 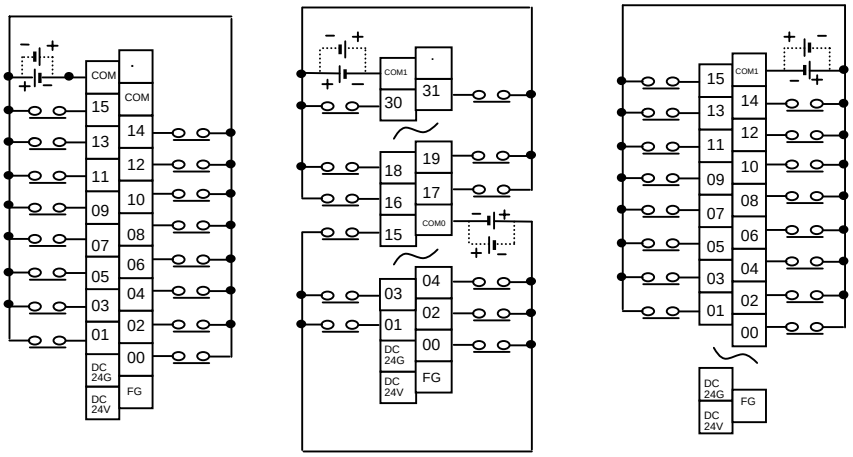
TR output module	[GSL-TR2A] [GSL-TR4A] [GSL-DT4A(output section)] 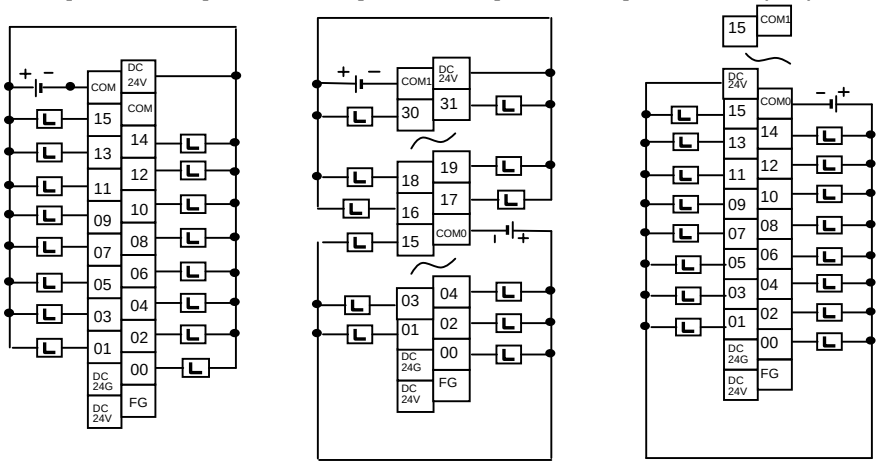
RELAY Output module	[GSL-RY2A] 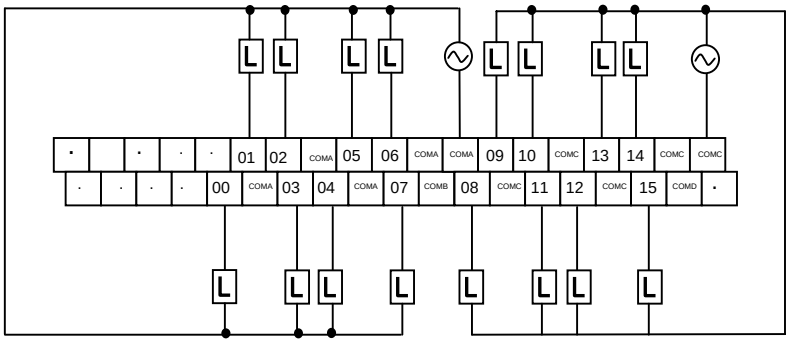 * COMA and COMB are connected internally respectively.

3.4 Examples of System Configuration

3.4.1 Profibus-DP System

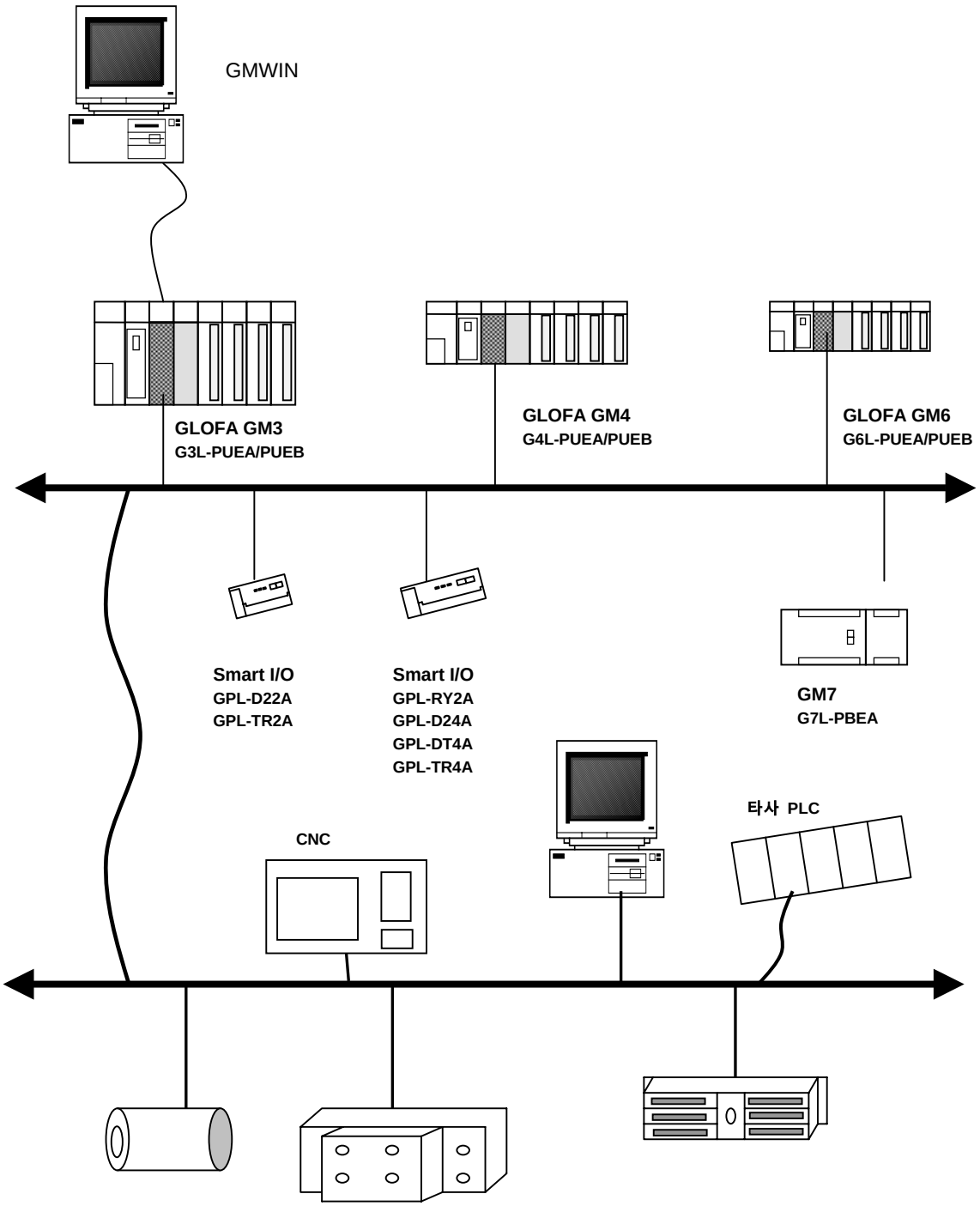

3.4.2 DeviceNet System

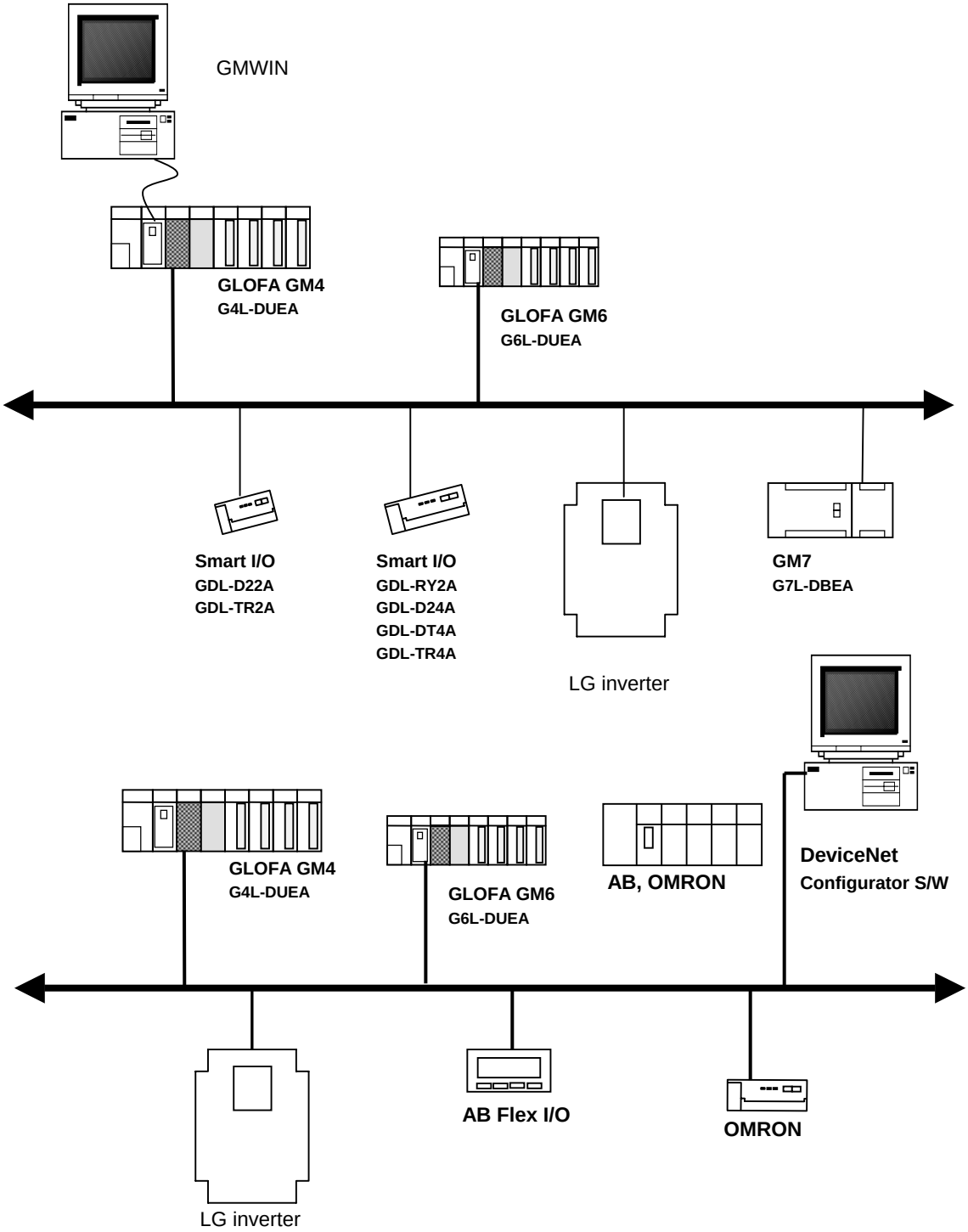

3.4.3 Rnet System

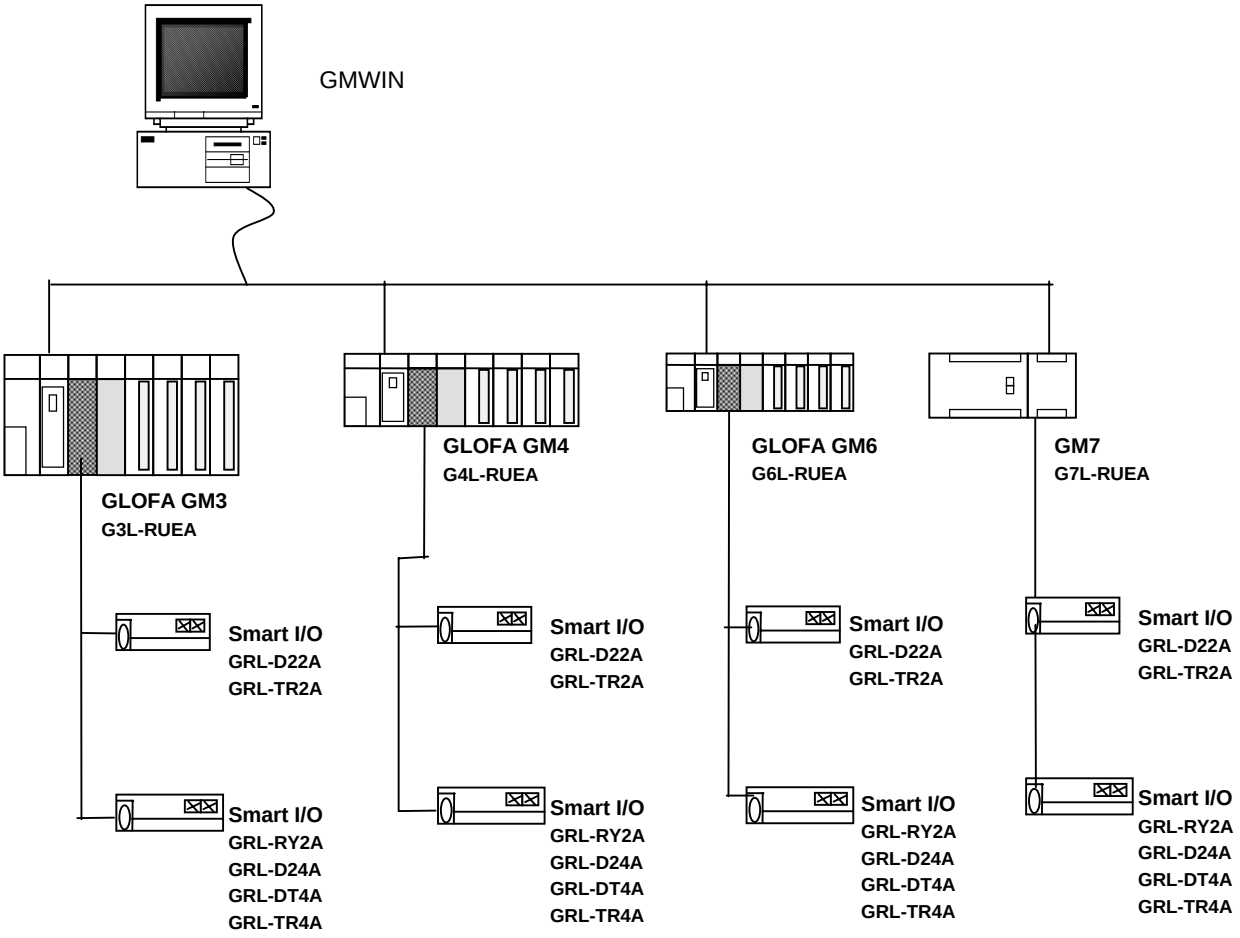

3.4.4 Modbus System

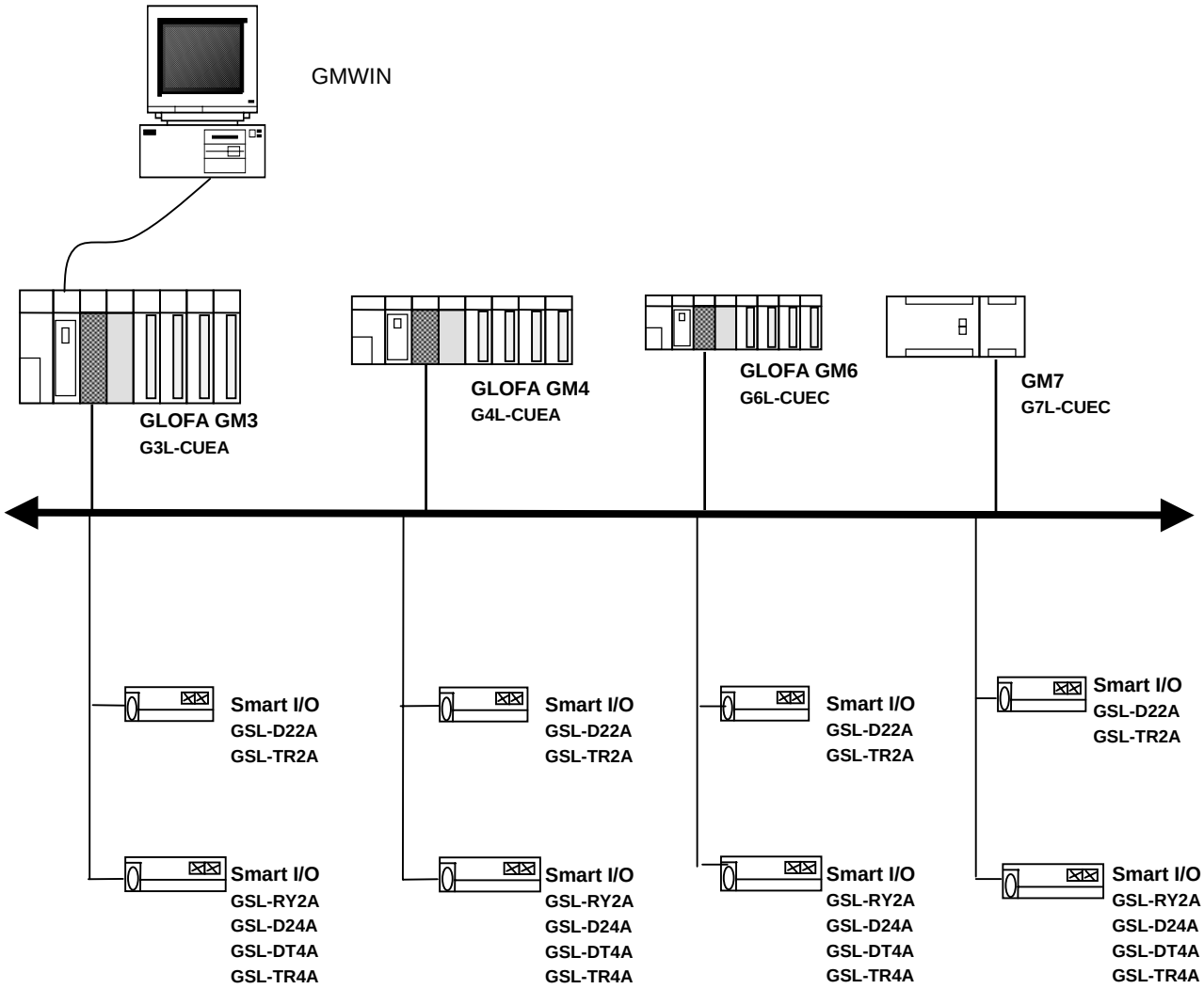

Chapter 4 Communication Programming

4.1 Overview

There are two kinds of Programming methods using the Smart I/O series.
For further information, please refer to the user's manual related to "master module".

1) *High Speed Link*

High Speed Link is used when other station's data or information is periodically exchanged at every specific time. By referring the changing data of its own station or other station periodically, it enables to utilize the data to the system effectively and communicates by setting the simple parameter.

The setting method for GLOFA series is to designate its own area and the area of other station to send or receive and data size, station no. in GMWIN parameter setting (for MASTER-K, in KGLWIN parameter setting) and then carry out the communication. Data size is at least 1 word (16 points) for communication and Rnet communication is available up to 3,840 words. The communication period is available to set max. 20ms up to 10 sec. according to the communication contents.

As it is available to communicate with other station by simple parameter setting, it is easy to use this program and the high speed process of internal data enables to process lots of data at the same time periodically.

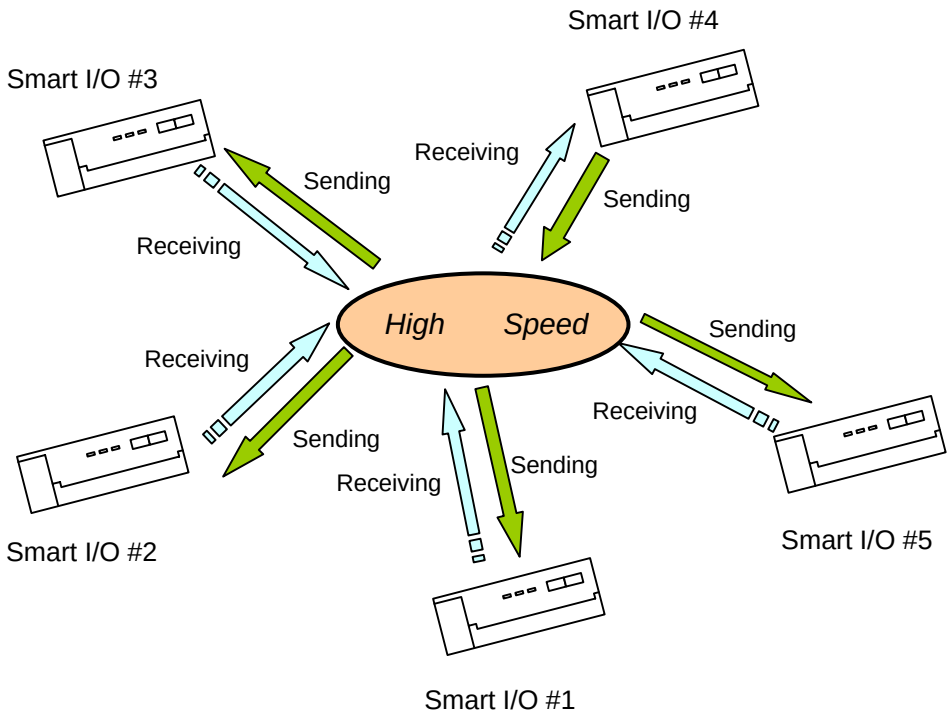

2) *Function Block*(GLOFA-GM) / Command(MASTER-K)

High Speed Link is periodic communication, but communication by *Function Block*/command is the service to communicate when the specific event to communicate with other station occurs. In case that the error occurs in other station which results in sending this content to other other station or when specific contact is entered to communicate, it is available to use *Function Block*/command.

The program method is written by designating Enable condition, communication module installed module position, station no., data area of its own station, the area of other station using *Function Block* per type made by GMWIN program mode for GLOFA series (by KGLWIN program mode for MASTER-K series) in advance and command.

Data size to communicate in *High Speed Link* is word (16 points) unit but in GLOFA *Function Block*, it is available to communicate with each other station per data type such as Bit, Byte, Word etc. and in MASTER-K, also by Word unit.

Difference between *High Speed Link* operation and the operation by *Function Block*/command

Contents	*High Speed Link*	*Function Block*/command
Basic unit of TX/RX data	1word(16 points)	GLOFA : available per data type (Bit, Byte, Word etc.) MASTER-K : supports only Word type.
Communica-tion period	20ms(per scan) ~ 10sec	Performs whenever Enable condition of communication program starts.
Operation method	Parameter setting→Download to PLC→*High Speed Link* allowed→ run	GLOFA : Compile→ Download to PLC →Run MASTER-K : Download to PLC→Run
Control by CPU operation mode key	*High Speed Link is performed regardless of the* CPU satates(RUN, STOP, PAUSE)	Performs the operation following to the key condition of CPU module.

Remark

1) *High Speed Link* service is used only for Profibus-DP, DeviceNet, Rnet series from Smart I/O series. Configuration tool to operate the corresponding module is provided separately.
2) *Function Block* service is used for Modbus communication programming and for further information, refer to the user's manual.

4.2 High Speed Link

4.2.1 Overview

High Speed Link is a communication sevice which transmits data by setting parameter(TX/RX size, period of TX/RX, area of TX/RX and storage).

- Setting *High Speed Link* block :

(1) In case that there are several areas for sending/receiving, it is available to set max.64 block (32 for seinding, 32 for receiving) respectively.
(2) Available to set 60 words per block.
(3) Available to use 3,840 words for max. link point.

- Sending/receiving period setting function :

As the user can set sending/receiving period per each block, it is available to set the sending/receiving period from 20ms (every scan) to 10 sec. dividing into the area which needs specially rapid sending/receiving and the area not needed.

- Sending/receiving area setting :

It is available to set sending/receiving area per data block according to setting I/O address.

- *High Speed Link* information provision function :

By providing the user with *High Speed Link* information by the user keyword, it enables to build reliable communication system easily.

Maximum *High Speed Link* points according to device type(master standard)

Classification		Max. communication point(word)	Max. sending point(word)	Max. block no.	Max. point per block (word)	Remark
Smart I/O series	G3/4/6/7L-RUEA	3,840	1,920	64(0-63)	60	Rnet I/F Module
	G3/4/6L-PUEA/PUEB	1,792	1,792	64(0-63)	60	Pnet I/F Module
	G4/6L-DUEA	128	128	64(0-63)	60	Dnet I/F Module

4.2.2 *High Speed Link* Sending/Receiving Data Processing

Sending/receiving data processing in *High Speed Link can be described as follows.*

Ex) This is the example to send/receive the data from local master (0 station) to Smart I/O station. This is the map to send/receive the data from/to the corresponding remote station when output module is allocated by 1,2,3 station respectively and input module is set as 4,5,6 station. The address, sending/receiving period, data size of Smart I/O station is as follows.

High Speed Link parameters have 32 blocks no. for sending and 32 blocks no. for receiving to send/receive the data and Block no. can be assigned and used from 0 to 63 for sending/receiving.

Generally, when sending the data, the sender is required to determine data to read and block number to send without designating the no. of other station. But in case that it is set by the remote (for example: Smart I/O series), the user is required to determine the station no. of Remote station (node) and block no. to send, and data sending/receiving mode for the remote station.

The following is the example of sending/receiving parameter setting for Smart I/O series that is composed of input module and output module. This sends/receives the data from master that tries to access Smart I/O module to each remote station. The block no. data address, communication period, data size of the corresponding module from local GMWIN or KGLWIN shall be set in *High Speed Link* parameter. In this case, you should pay attention that the block no. should be different regardless of I/O module in order to send/receive the desired data.

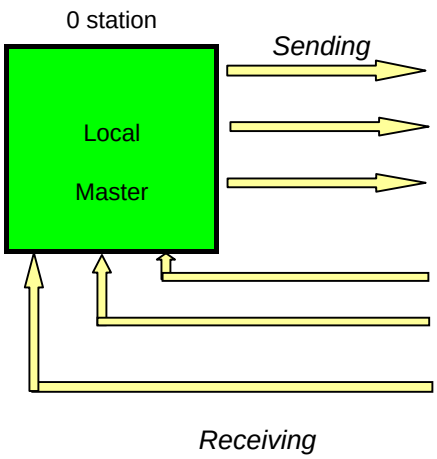

[Smart I/O]

Mode	Block no	Memory area	Period	Size	Type
Out	1	%QW0.0.0	200ms	1	Remote
Out	2	%QW0.0.0	100ms	2	Remote
Out	3	%QW0.0.0	200ms	1	Remote
In	4	%IW0.0.0	1s	1	Remote
In	5	%IW0.0.0	2s	1	Remote
In	6	%IW0.0.0	200ms	1	Remote

4.2.3 Operation Order by *High Speed Link*

GLOFA-GM [GMWIN]		MASTER-K [KGLWIN]	
①	Project parameter *High Speed Link* parameter	①	Project Parameter
②	*High Speed Link* parameter *High Speed Link* 1~4	②	Parameter Link 1, Link 2
③	Network type ⊙ GLOFA Dnet ⊙ GLOFA Pnet ⊙ GLOFA Rnet	③	Link Permit/prohibit
④	Slot number 0 ~ 7 slot	④	Own station number 0 ~ 63 stations
⑤	Own station number 0~63 stations(Pnet 0~31 stations)	⑤	Slot 0 ~ 7 slot
⑥	Station type ⊙ Remote	⑥	Type Rnet/Dnet
⑦	Station number 0~63 stations(Pnet 0~31 stations)	⑦	Station number 0 ~ 63 stations
⑧	Mode ⊙ Sending ⊙ Receiving	⑧	Block number 0 ~ 31
⑨	Block number 0 ~ 31	⑨	Communication type Remote sending/remote receiving
⑩	Area to read/storage ⊙ %Q ⊙ %I ⊙ %M	⑩	Sending device Address area to send
⑪	Sending/receiving period 20ms ~ 10sec.	⑪	Receiving device Storage area
⑫	Registration list ->Size 1~60 words	⑫	Size/Communication speed Word, byte/20ms~10s

4.2.4 GMWIN's Setting of *High Speed Link* Parameter

High Speed Link parameter selects link parameter from GMWIN project menu and sets the corresponding item and the setting order and the function per item are shown as follows.

1) *High Speed Link* Project Setting

If selecting *High Speed Link* parameter from GMWIN project basic screen below, it shows the *High Speed Link* parameter basic screen and the user can select the corresponding item.

GMWIN Project Basic Screen

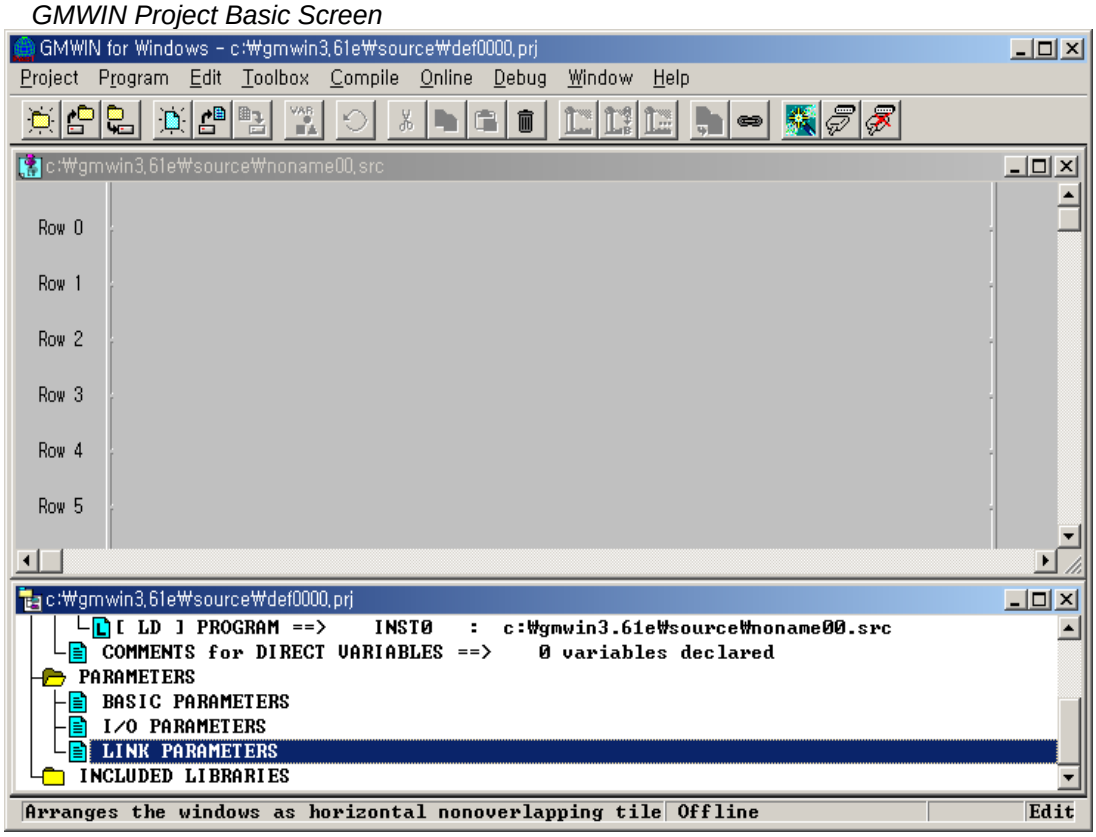

2) Link Parameter Selection

(1) Setting method : select parameter-*High Speed Link* parameter from project screen.

GMWIN High Speed Link Parameter

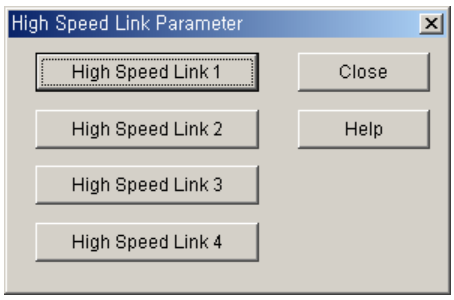

(2) Setting function : GMWIN *High Speed Link* 1~4 items means max.installation no. of communication module by master PLC CPU type.
A) If the using communication model is only one, select *High Speed Link* 1.
B) One *High Speed Link* parameter is available to set only for one communication module.

3) Link Parameter Setting

If selecting the corresponding parameter from parameter setting basic screen, *High Speed Link* parameter setting window will appear and when setting the parameter first, the initial value will be indicated as below.

GMWIN Parameter Setting Initial Screen

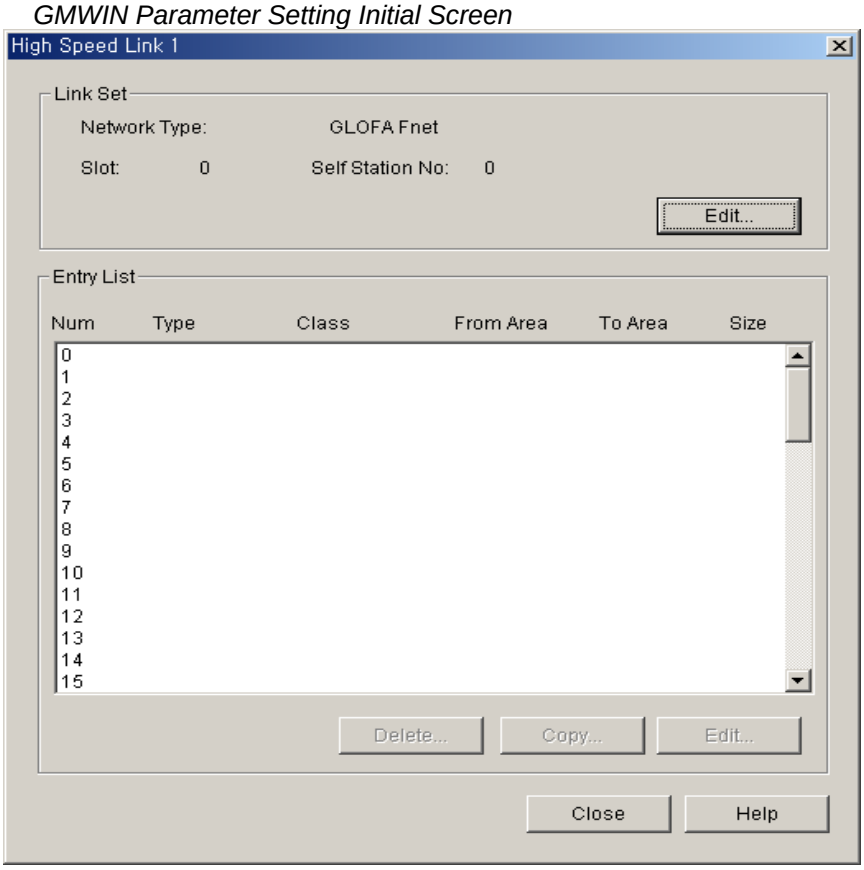

Parameter setting initial screen is composed of two items such as “Link set’ and “Entry list” and the setting methods per each item and its function are as follows.

(1) Link Setting

Link setting is the item to set the basic articles of communication module to carry out *High Speed Link*.

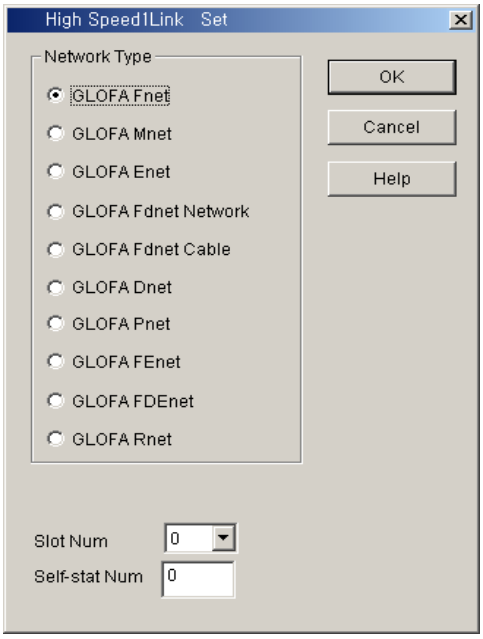

Network type : this is to set the type of communication module and select according to the installed communication module model tpye.

Slot number : set one of 0 ~7 for slot number that communication module is mounted(the right side of CPU module is “0” slot).

Own station number : enter its own station no. that is set on the station no. switch of communication module front side.
It is available to set 0~63 by decimal number. Self station number is unique number to distinguish communication module in the same network system, so doesn’t use duplicated station number.
(Station num. ‘0’ in Profibus-DP is reserved(can not be used). Refer to Chap.5)

(2) Entry List Setting

Entry list is the area to register the actual sending/ receiving data information. Set the registration no. from ’0’ of registration list area first and place the cursor on the desired position of number to set and double click or select ‘Edit …’ button on the bottom of screen to set the corresponding contents in the *High Speed Link* item modification screen.

High Speed Link item modification screen

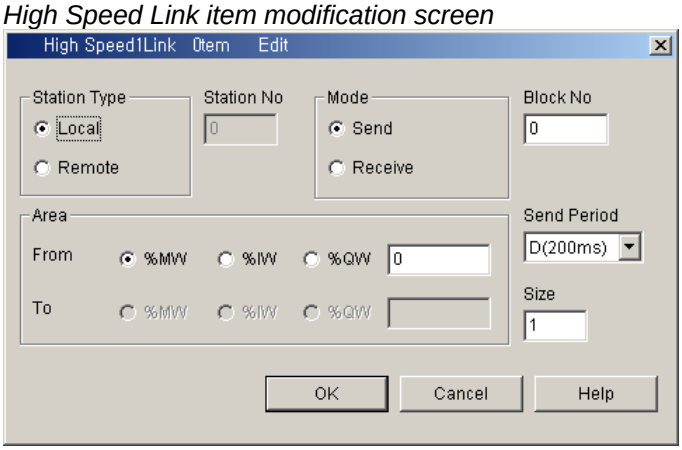

Example of sending parameter setting screen

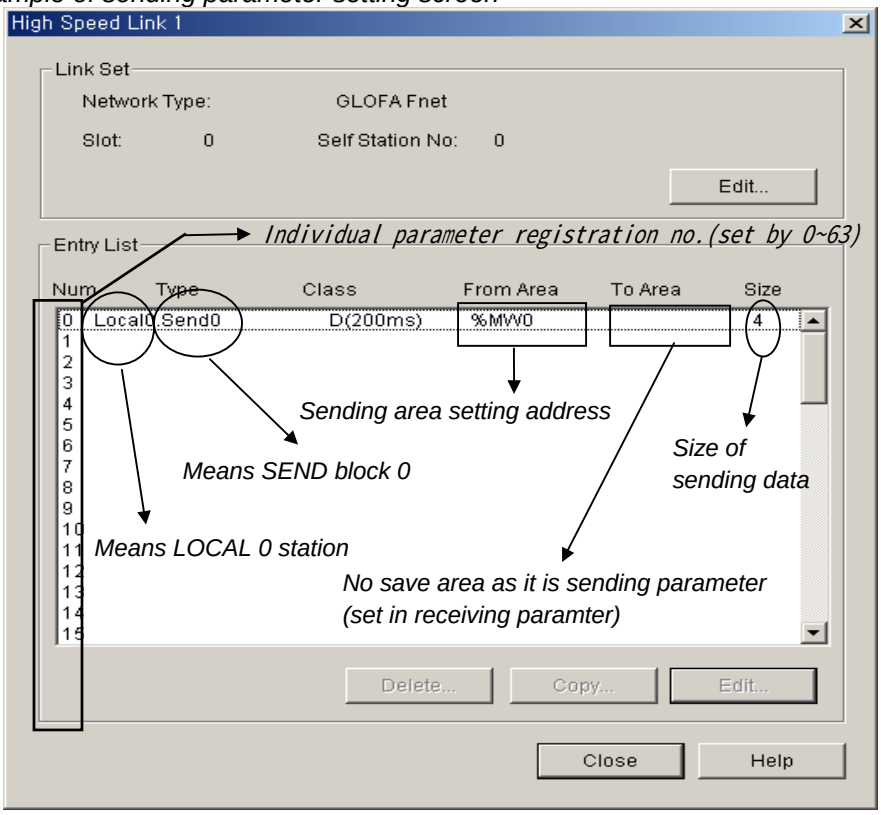

- **Entry List Num :** a serial no. indicating the order registred. Available to set 64 no.(from 0~63). Not related to the order of sending/receiving.

- **Station type :** this is the item to determine the type of other station to receive/send. Select remote type to communicate with Smart I/O.

- **Station no. :** In case that other station to communicate is local type, it is required to set the self station no. for sending and other station no. for receiving while in case of remote type, set other station no. all for sending/receiving. Thus, it is required to set the remote station no. when sending/receiving as Smart I/O series because it does not have parameter setting function in the remote station itself.

- **Mode :** this is the item to determine whether or not to send/receive data of the corresponding block. When receiving, select 'receive". The number of sending/receiving block is available to set max. 32 and if setting more than 32, the parameter error occurs and the normal communication does not work.

- **Block no. :** this is the parameter to send/receive lots of data of various area from one station and distinguish the data of various block each other. Generally, the station no. and block no. set by sending station is transmitted together with sending data and if the receiving station wants to receive this data, it is required to receive it as the corresponding block no. sent by sending station. The block no. of sending/receiving for one station is available to set max. 32 and it is not allowed to set the same block no. for the same station no. For remote station, it is set

differently regardless of sending/receiving.

● **Area :** after selecting data area to send/receive, enter the address direct and set the area.

Remote sending: read any data of the self station (designate one from %MW,%IW, %QW within the area to read) and designate which area of remote station is sent (%QW is only available to designate in the storage area. Remote sending data is available to send in the remote output side.)

Remote receiving: read any area of other remote station not the own station (%IW is only available to designate in the storage area. It is available to read the remote input data) and designate which position of the own station to save from %MW,%IW, %QW. As memory map is different according to CPU models, please refer to memory map described on the corresponding maual.

The flowing shows the setting available areaaccording to station type.

Setting Area according to Station type

Remarks		Sending			Receiving			
		%IW	%QW	%MW	%IW	%QW	%MW	
Remote	Area to read	○	○	○	○	X	X	
	Storage area	X	○	X	○	○	○	

○:setting available X: setting not availble

Remark

1) The address of Smart I/O series is allocated as %IW0.0.0 ~ %IW0.0.1 in case of input, and %QW0.0.0 ~ %QW0.0.1 in case of output.

- Size : data size to send/receive unit is 1 word (16 points).

- **Sending/Receiving period :** *High Speed Link* is the service to carry out the sending/receiving by the parameter set by the user at the point that PLC program ends. Thus, when PLC program scan time is short within several ms, communication module begins to transmit the data according to every program scan which result in increasing the communication amount and reducing the effectiveness of overall communication system. Thus, to prevent this, the user can set the sending/receiving period from min. 20ms to max. 10sec. If not setting, it shall be set as basic value of 200ms automatically. Sending/Receiving period means the sending period in case that the corresponding block is set as 'sending' and the data receiving check period of the corresponding block in case that it is set as 'receiving'. If PLC program scan time is longer than the setting sending period, it shall be sent at the point that PLC program scan ends and the sending period becomes to be equal to PLC program scan time.

Data Sending Delay Time (PLC program scan time > sending period)

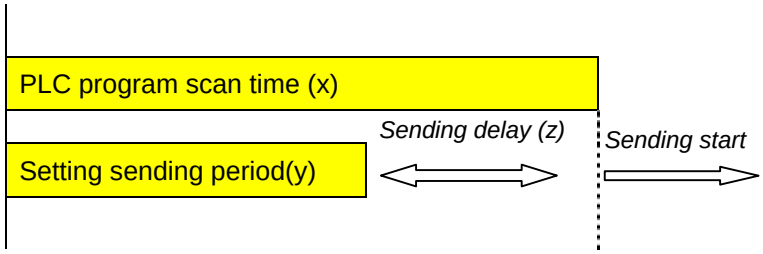

Sending delay time : (z) = (x) - (y) ms

Data Sending Delay Time(PLC program scan time < sending period)

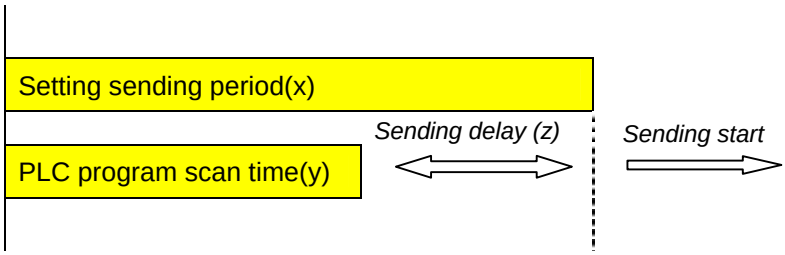

Sending delay time : (z) = 0 ms

Remark

1) When setting the receiving period, the user can check if it is set as the value greater than the period of the corresponding block set by other station to receive normally.

4) *High Speed Link* operation

When *High Speed Link* parameter setting is completed, if the user execute 'make' from compile menu of GMWIN and then write parameter with PLC CPU and start the *High Speed Link* service and then *High Speed Link* service by parameter setting will begin. The start order of *High Speed Link* is as follows.

Parameter Write

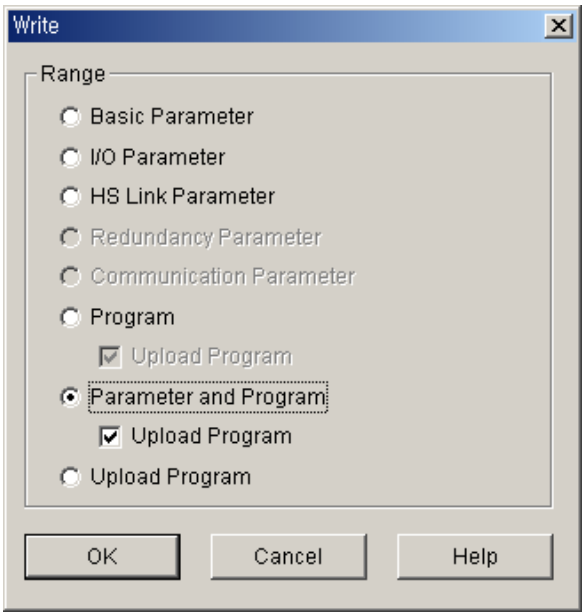

After saving *High Speed Link* parameter written by the user in GMWIN project file and connecting to PLC through 'online connect' of GMWIN basic menu, select 'write' and the window 'write' appears as above. If you select '*High Speed Link* parameter' or 'parameter and program' from the above menu and download the selected parameter, the corresponding contents shall be downloaded.
In this case, Link Enable which is *High Speed Link* start information shall be OFF. Therefore User has to click on the appropriate item of *High Speed Link* in link Enable setting.

5) *High Speed Link* start

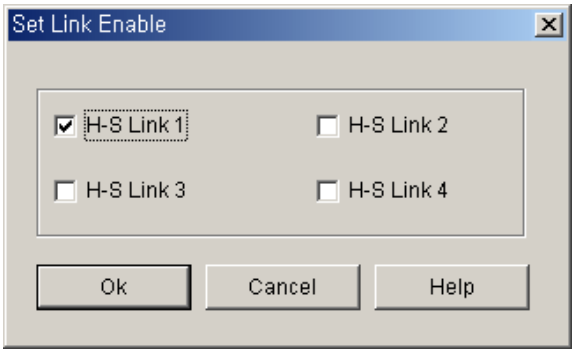

After 'parameter write', *High Speed Link* maintains all 'stop' but after the user sets Link Enable,

High Speed Link runs.

'Set Link Enable' is available only for PLC stop mode. And if 'set *High Speed Link* Enable' starts, *High Speed Link* runs regardless PLC action mode and parameter and link enable information shall be preserved by having battery backup in PLC CPU even when power is off.

Relation of PLC mode and High Speed Link

Classification	Parameter download	Set Link enable	*High Speed Link* action	Remarks
PLC RUN	X	X	○	*High Speed Link* Only if allowed Act
PLC STOP	○	○	○	
PLC PAUSE	X	X	○	
PLC DEBUG	X	X	○	

4.2.5 KGLWIN Link Parameter Setting

In case of KGLWIN, its function is the same as that of GMWIN and its opperating method and setting is also the same. Select 'link' from KGLWIN project menu and program it.

1) *High Speed Link* project setting

If selecting 'link' from Project menu, *High Speed Link* parameter basic screen will appear.

KGLWIN Project Basic Screen

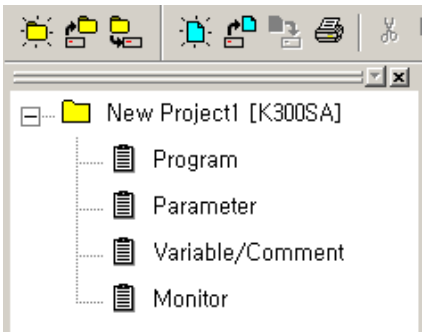

2) Link parameter selection

(1) Setting method : select 'parameter'-'link' from project screen.

KGLWIN Parameter menu

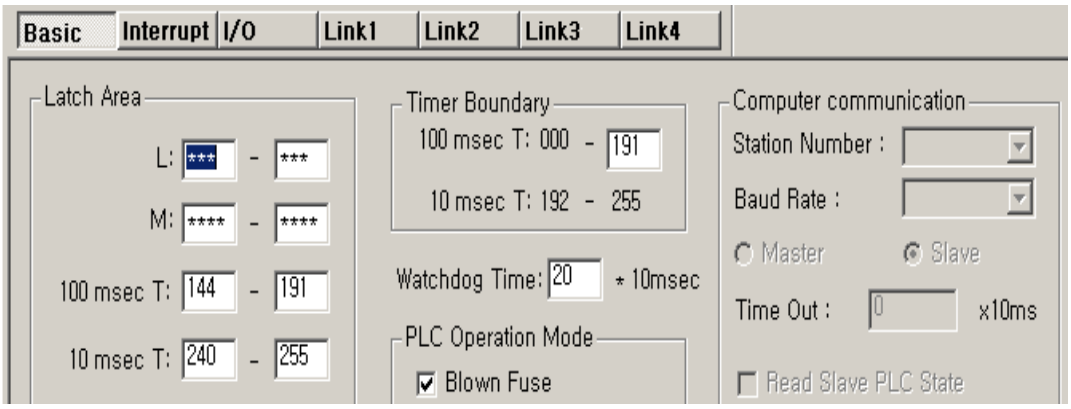

(2) Setting function : KGLWIN link 1~4 means max. Installation no. of communication module according to master PLC CPU types.

A) If using one communication module, select link 1.
B) Only one *High Speed Link* parameter is available to set for one communication module.

3) Link initial setting

KGLWIN contains all general contents necessary for communication setting in link items and the setting method is the same as that of GMWIN.

KGLWIN Parameter Setting Initial Screen

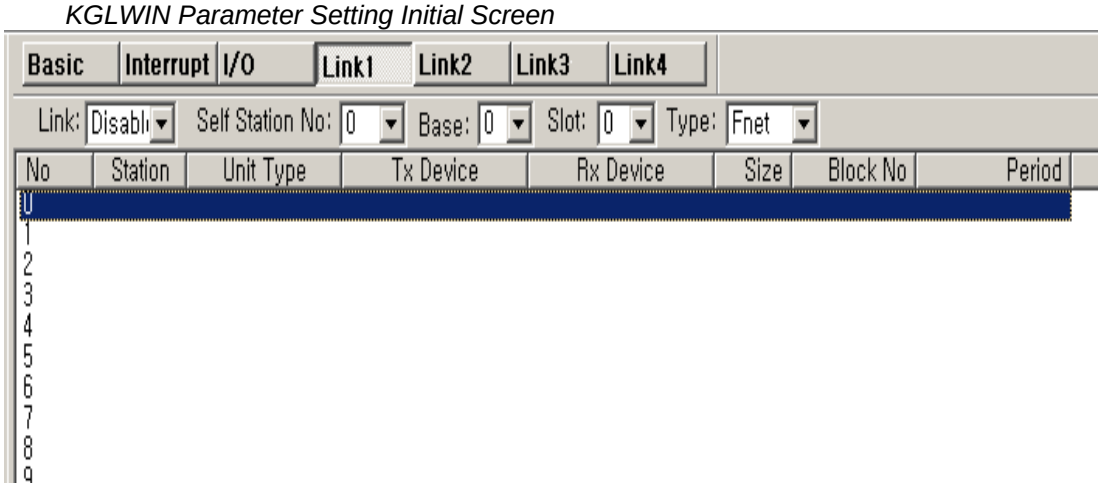

Parameter setting initial screen is composed of two items such as 'Link setting' and 'Entry list' and the setting method and function per each item is as follows.

(1) Link

Link is the Enable condition to carry out *High Speed Link* of the setting parameter.

Permit : High Speed Link is ON
Prohibit : High Speed Link is OFF

(2) Self Station no.

Enter its own station no. that is set on the station no. switch of communication module front side. It is available to set 0~63 by decimal number. Self station number is unique number to distinguish communication module in the same network system, so doesn't use duplicated station number.

(3) Slot

Set the slot no. that the desired communication module to set is installed by selecting one from the range of '0'~'7'.

(4) Type

Designate master communication type to communicate with Smart I/O module.

Rnet : Fieldbus communication module
Pnet : Profibus-DP communication module
Dnet : DeviceNet communication module

4) Link Setting Details

This is KGLWIN link item modication menu. If the user set the sending/receiving with the device to communicate actually, the parameter setting is completed.

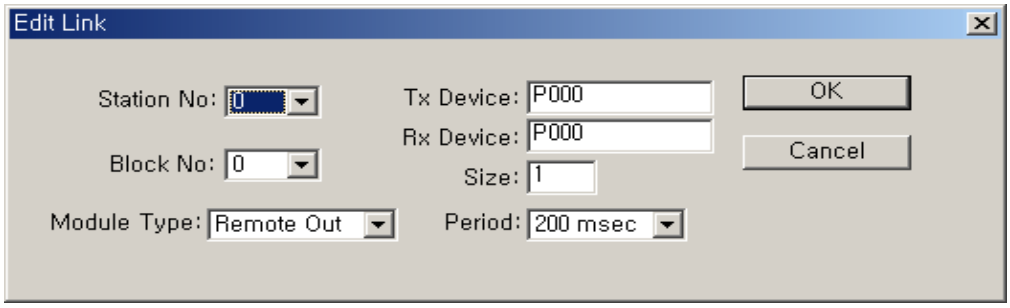

(1) Station no.

Sets the station no. of other station (remote station) to communicate with Smart I/O station.

(2) Block no.

This is the parameter to be set to send/receive lots of data of various area from master and distinguish the data of various block each other. For remote station, it is set differently regardless of sending/receiving.

(3) Communication type

This designates the communication method that master will carry out, and distinguish the communication type for local station and remote station..

Local sending : sets data sending between local stations
Local receiving : sets data receiving between local stations
Remote sending : sets data sending to remote station(Smart I/O).
Remote receiving : sets data receiving from remote station(Smart I/O).

(4) Sending device/Receiving device

This means the area of sending/receiving and for setting, please refer to the table as below.

Classification	Mode	Setting available area	Remarks
Remote output	Sending	P, M, L, K, F, D, T, C all area	Sending area of its own station
	Receiving	P area	Receiving area of remote station
Remote input	Sending	P area	Sending area of remote station
	Receiving	P, M, L, K, D, T, C area	Receiving area of its own station

(5) Size

Sets the size of sending/receiving data and the basic unit is **Word.**
(But, in case of **DeviceNet,** basic unit is **Byte**.)

(6) Communication period

High Speed Link is the service to carry out the sending/receiving by the parameter set by the user at the point that PLC program ends. Thus, when PLC program scan time is short within several ms, communication module begins to transmit the data according to every program scan which result in increasing the communication amount and reducing the effectiveness of overall communication system. Thus, to prevent this, the user can set the sending/receiving period from min. 20ms to max. 10sec.

5) *High Speed Link* operation

High Speed Link in KGLWIN is performed automatically with the program download according to communication setting.

4.2.6 *High Speed Link* communication status flag information

1) *High Speed Link* information function

To confirm the reliability of data read from other station through *High Speed Link*, it provides the user with the method to confirm the *High Speed Link* service as *High Speed Link* flag information. It has individual information such as HS_STATE, TRX_STATE, DEVICE_MODE, ERROR that informs the communication status per 64 registration items in the flag of run-link, link-trouble and parameter that informs the overall status of *High Speed Link*. The user can utilize the above information by combining with *High Speed Link* sending/receiving data as keyword type when writing the program in case of emergency or maintenance.

High Speed Link information

Classifi cation	Run-link	Link-trouble LINK_ TROUBLE	Sending/ receiving status TRX_MODE	Action mode DEV_MODE	Error DEV_ERROR	*High Speed Link* status HS_STATE
Information type	Overall information	Overall information	Individual information	Individual information	Individual information	Individual information
Keyword name (□=HS link no. 1,2,3,4)	_HS□RLINK	_HS□LTRBL	_HS□TRX[n] (n=individual parameter no.0~63)	_HS□MOD[n] (n=individual parameter no. 0~63)	_HS□ERR[n] (n=individual parameter no. 0~63)	_HS□STATE[n] (n=individual parameter no. 0~63)
Data type	BIT	BIT	BIT-ARRAY	BIT-ARRAY	BIT-ARRAY	BIT-ARRAY
Monitoring	Available	Avaiable	Available	Available	Available	Available
Program	Available	Avaiable	Available	Available	Available	Available

(1) Run-Link (_HS□RLINK)

This is the overall information that shows whether or not *High Speed Link* is running normally by the parameter set by the user. Once ‘ON’, it maintains ‘ON’ until link enabe is ‘OFF’ and if the following condition is given, it shall be ‘ON’.

① When link enable is ‘ON’.
② when parameter registration list setting is set normally all.
③ when sending/receiving all data that corresponds with parameter registration list within the setting period.
④ when all other station status set in the parameter is ‘RUN’ and at the same time there is no error.

RUN-LINK ON condition

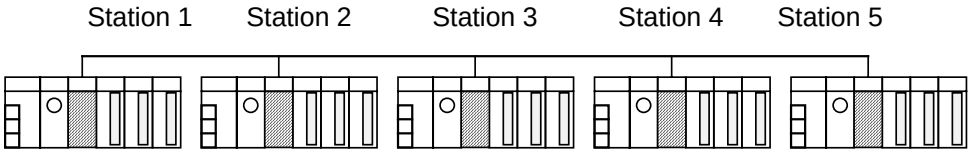

(a) *High Speed Link* system configuration

Station 1	Station 2	Station 3	Station 4	Station 5
Sending: 2words Receiving: 2word (station 2) Receiving: 2word (station 3)	Sending: 2words Receiving: 2word (station 1) Receiving: 2word (station 4)	Sending: 2words Receiving: 2word (station 1) Receiving: 2word (station 5)	Sending: 2words	Sending: 2words

(b) Examples of *High Speed Link* parameter setting of each station

The figure shows *High Speed Link* system configuration to explain RUN-LINK ON condition. In case that 5 communication modules are connected by network as shown (a) of the figure and carry out *High Speed Link* as the content of parameter of figure (b), RUN-LINK ON condition of Station 1 is as follows.

① when in the self station (station 1), Link-Enable is 'ON',
② when the self station (station 1) is RUN status,
③ when the self station (station 1) is not the error status,
④ when the sending parameter data set in the self station (station 1) is sent properly for the sending period,
⑤ when the data receiving from station 2,3 is received properly for the receiving period,
⑥ when the action mode of other station (station 2, 3) to send the data to the self station (station 1) is RUN mode and not the error status and it is communicated properly for the sending/receiving period,
⑦ when in the other station (station 2,3) of the self station (station 1), the action mode of other other station (station 4,5) set in the parameter is RUN mode and not the error status and it is communicated properly for the sending/receiving mode.

If the above 7 items are satisfied, RUN-LINK of station 1 shall be ON. If using RUN-LINK contact associated with program in the system where PLC of various stations performs interlocking through *High Speed Link*, it is available to carry out the mutual monitoring of sending/receiving data and the reliable communication. But, once RUN-LINK contact is 'ON', it maintains 'ON' status until Link-Enable becomes 'OFF'. Thus when monitoring the abnormal status such as communication error, it is required to use link trouble

information contact together as follows.

(2) Link-Trouble (_HS□LTRBL)

When RUN-LINK violates the condition of RUN-LINK ON in the status that RUN-LINK is ON, LINK-TROUBLE shall be 'ON' and if recovered, it shall be 'OFF'.

(3) Sending/Receiving status (_TRX□STATE[0..63])

When the parameter action that is set in the individual parameter registration no.(0~63) respectively, is carried out properly in accordance with sending/receiving period, the corresponding bit shall be 'ON' and if not carried out, it shall be 'OFF'.

(4) Action mode (_HS□MODE[0..63])

It describes the parameter action mode information that is set in the individual parameter registration no.(0~63). If the station set in the registration item is RUN mode, the corresponding bit shall be 'ON' and if STOP/PAUSE/DEBUG mode, it shall be 'OFF'.

(5) Error (_HS□ERR[0..63])

It describes the parameter error information that is set in the individual parameter registration no.(0~63). The error indicates generally the status that the PLC does not work the user program normally and if it is 'OFF', this means that the PLC of other station works normally and if 'ON', this means that the other station is in the abnormal status.

(6) *High Speed Link* status (_HS□STATE[0..63])

It describes the general information for registration list by collecting all individual information per item. That is, if the sending/receiving status of the corresponding list is normal and the action mode is RUN and there is no error, it shall be 'ON and if violating the above condition, it shall be 'OFF'.

Remark

Among the keywords used in (1)~(6) items

□: : describes *High Speed Link* no.(1,2,3,4) used when setting the parameter.

(if the installed communication module is one, *High Speed Link* 1 shall be used.)

[0…63] : describes individual parameter registration no.

(check the communication status of each parameter that is in the registration no.0~63.)

Remark

1) In case of Profibus-DP module, it has other *High Speed Link* flag. For further information, please refer to '5.3.12 GMWIN *High Speed Link* information'.

4.2.7 *High Speed Link* Speed Calculation

1) Overview

High Speed Link data transmission speed can be determined by various factors.

Data transmission from one communication station to another communication station shall be performed through the following path.

Data Transmission Path through Communication module

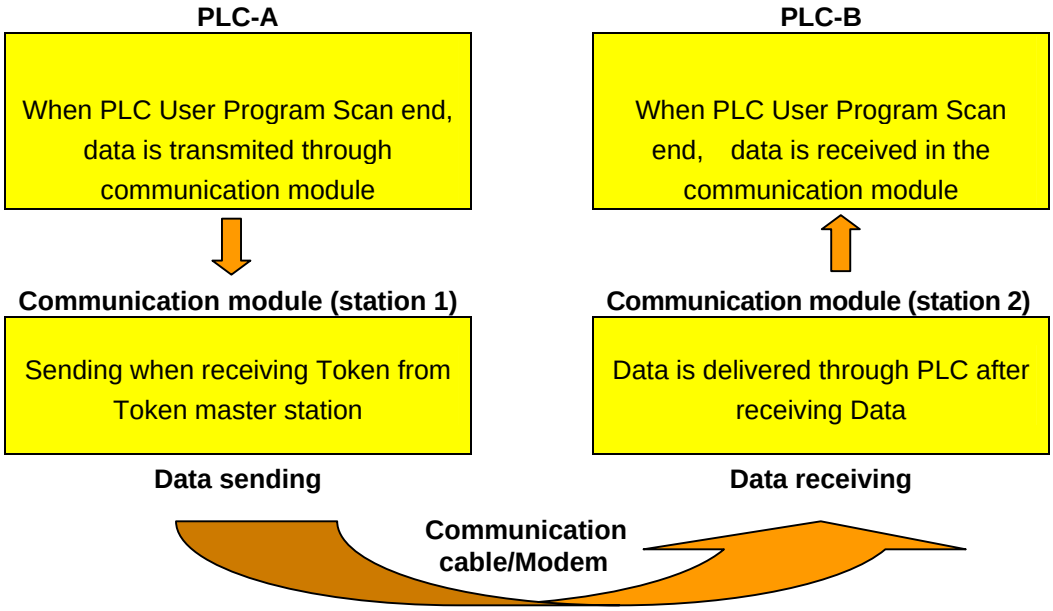

As shown on the abvoe figure, there are 3 kinds of path to send data to other station through communication module and the sum of time to take for each path determines the sending time.

The table below describes the major path of data transmission and the factor that influences the transmission time per path.

Data Transmission Path and Time Factor

Path	Time factor
PLC CPU(A) --> communication module (station 1)	PLC-A program scan time
Communication module (station 1) --> Communication module (station 2)	Communication scan time + Communication O/S scan time
Communication module (station 2) --> PLC CPU(B)	PLC-B program scan time

As data delivery between PLC CPU and communication module is executed at the point when the user program of PLC ends, program scan time shall be major factor of data transmission. Program scan time monitor can know the current program scan time

from program tool. And as data sending/receiving is carried out after obtaining the Token from communication module which allocates tokens so that communication module sends its own data, this time also is included in the communication delay time.

The following figure shows PLC program scan time and the sending point according to communication scan time.

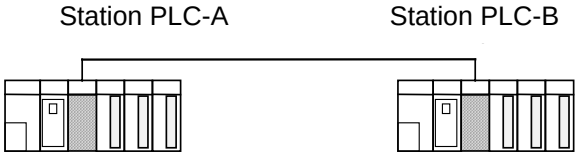

Relation of PLC scan time and Communication scan time

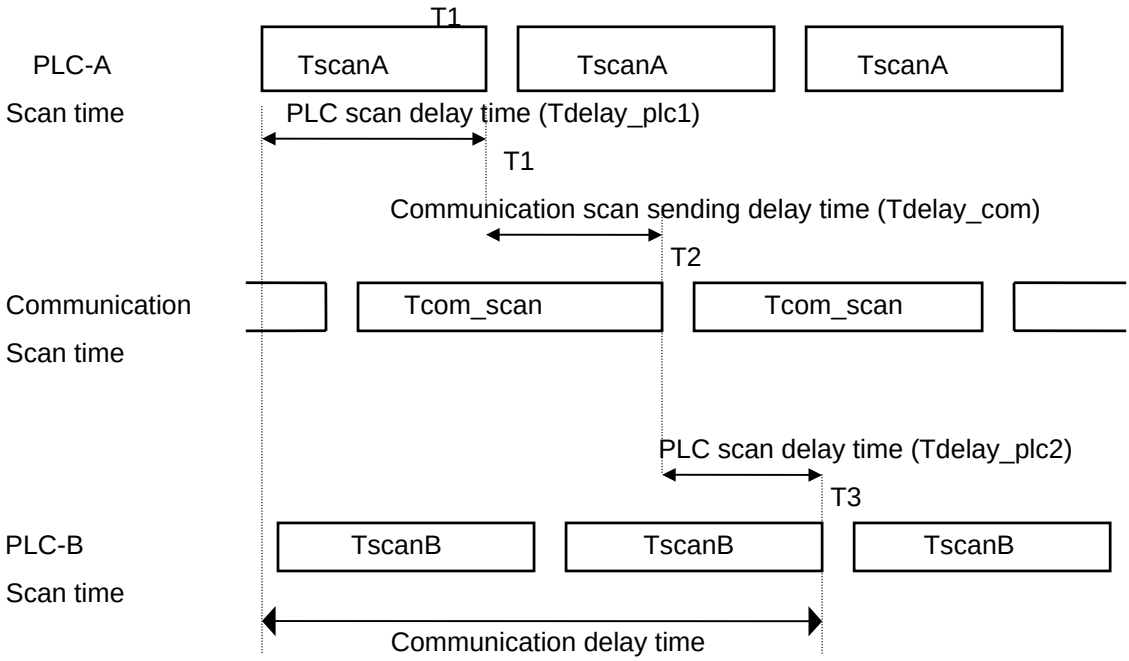

From the above figure, total communication delay time is T1+T2+T3.

As above, communication delay time shall be determined by various variables such as total no. of communication station, program size and O/S scan time of communication module. As these variables are difficult to calculate its value, we recommend the example of simple *High Speed Link* communication speed as follows.

2) *High Speed Link* speed calculation method

High Speed Link speed shall be calculated with maximum time to take to send one block data from PLC-A to PLC-B by using the above figure as an example. As communication delay time is different according to the no. of overall communication station and program size, we divide into two cases such as complicated system that the sending data no. to more than 10 communication station exceeds total 512 bytes and the simple system less than 512 bytes and calculate *High Speed Link* speed as follows.

(1) Simple system

In the system that total communication station is below 10 stations and total sending data size is less than 512 bytes, you can calculate *High Speed Link* speed by using the following formula.

St = P_scanA + C_scan + P_scanB ----------[formula 4-1]

St = *High Speed Link* max. Transmission time

P_scanA = PLC A max. Program scan time
C_scan = max. Communication module scan time
P_scanB = PLC B max. Program scan time

Each item shall be determined as follows.

① C_scan = THT × Sn ----------[formula 4-2]

THT = Token Hold Time : Token use time per one station
Sn = Total Station Number : Total communication station number

② Token Hold Time (THT)= Fnet : 8 ms

(2) Complicated system.

In the system that total communication station is more than 10 station and total sending data size is more than 512 bytes, you can calculate *High Speed Link* speed by using the following formula.

St = Et ×To ×Ntx + Mf ----------[formula 4-3]

Et = Effective Tx Ratio (Effective transmission Ratio)
To = Octet time (1 byte sending time)
Ntx = Total Tx number
Mf = Margin Factor

Each item shall be determined as follows.

①Et = Sn ×Nf ----------[formula 4-4]
Sn = Total communication station number
Nf = network factor and constant number value according to the communication system characteristic. In Fnet system, it is 1.5

② To = Octet Time. The time to take to transmit one byte data to the serial data.

- Fnet : 8 μs

③ Ntx = total sending data number including *Function Block*/command number and it is determined according to Fnet system as follows.

- Fnet : sum of *High Speed Link* sending byte number + Variable F/B(command) number ×256

④ Mf = margin value for the factors not described like the above formula such as O/S scan time of communication module. Fnet is set as the following value.

- Fnet : 16 ms

4.3 Function Block

4.3.1 Overview

Function Block is the function to write or read the specific data of the self station or the specific variable data in the specific area or specific variable area of other station when the regular event occurs, and it can be used diversely according to the purpose.

Program of Smart I/O series using the *Function Block* is limited all in Modbus Snet.
For further information, please refer to 'Chapter 8. Modbus communication'.

4.3.2 Start of GMWIN *Function Block*

When programming by using *Function Block*, please refer to the following. *Function Block* carries out the variable setting by input section and output section and for the setting method, please refer to the corresponding *Function Block*.

It describes based on GLOFA GM7 *Function Block*.

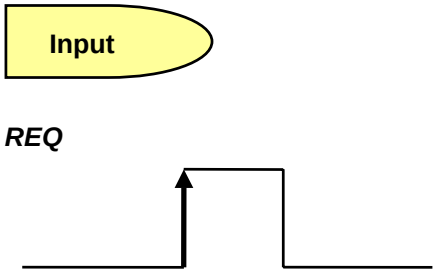

This is used as the start condition of modebus *Function Block* and it starts at the rising edge from '0' to '1'. Once started, *Function Block* is not influenced until receiving the response from other station. After setting NDR or ERR bit, it shall be reset in next scan.

SLV_ADDR :

This sets the remote station number to communicate by performing this *Function Block*. .

FUNC :

This enters modbus function code. For further information, please refer to 'Chapter 8 Modbus Communiction'.

ADDRH :

This designates the starting address and middle/high address among the starting address to read in remote station.

ADDRL :

This designates the low address among the starting address to read in remote station.

NUMH :

This designates the high address of data size to read from starting address in remote station.

NUML :

This designates the low address of data size to read from starting address in remote station.

Output

NDR :

After *Function Block* starting, if data receiving is OK, it shall be 'ON' and when the corresponding scan ends, it shall be 'OFF'. If using this bit as other *Function Block* input condition, it is available to carry out the reliable communication.

ERR :

After *Function Block* starting, if error occurs, it shall be 'ON' and maintains 'ON' until the next *Function Block* starts again and then 'OFF'. If error occurs, it is not available to receive the data.

STATUS :

It describes the detailed code value for the error when error occurs after starting *Function Block* and maintains the value until the next *Function Block* starts again and then 'OFF'.

Remark

Requirements of Function Block

1) *Function Block* requirements (REQ) start shall be executed after the previous execution is completed normally (after 'NDR' ON).

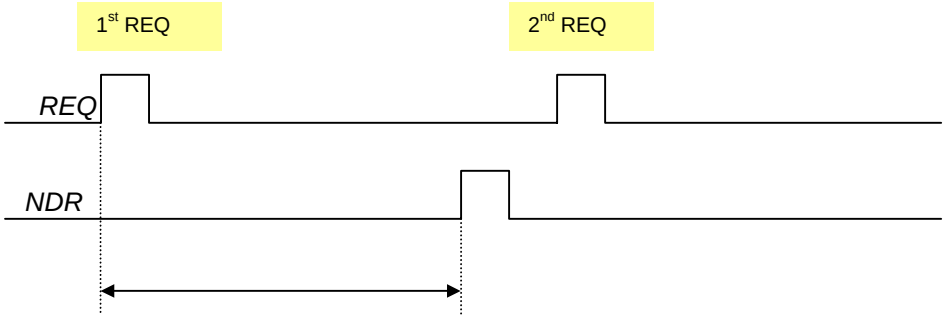

In communication = internal processing time + response wait time
(internal processing time : approx. 50 ~ 60ms)

4.3.3 Execution of KGLWIN command

MASTER-K command executes the programming by using KGLWIN Modbus command.
Please refer to the command execution method and available address area.
(Refer to Chapter 8.4.2 Modbus communication-MASTER-K series)

Chapter 5 Profibus-DP Communication

5.1 Overview

Profibus is the open type field bus that the manufacturer selects independently to apply and manufacture (Vendor-independence) and that is used widely for processing automation. DP among them is the most frequently used Communication profile and the network suitable for FA environment of Field Level and also is suitable for master-slave communication between master automation machine and distribution slave I/O machine. It is designed to install with low cost and DP is the most suitable item to replace the existing system such as 4~20mA or Hart system together with 24V parallel signal transmission to the production automation system.

Smart I/O module communication supports Profibus-DP through GM3/4/6 master module.
(G3L-PUEA/ G3L-PUEB/G4L-PUEA/ G4L-PUEB/G6L-PUEA/ G6L-PUEB)
For further information for Profibus-DP, please refer to 'Korea Profibus Association's homepage'. (http://www.profibus.co.kr)

5.2 Communication Specification

Classification	G3/4/6L-PUEA	G3/4/6L-PUEB
Module type	Master	
Network type	Profibus-DP	
Standard	EN 50170 / DIN 19245	
Media Access	Logical Token Ring	
Communication method	RS-485(Electric)	
Topology	Bus	
Modulation method	NRZ	
Communication cable	Shielded Twisted Pair	
Communication distance	1200 m (9.6k ~187kbps)	
	400 m (500kbps)	
	200 m (1.5 Mbps)	
	100 m (3M ~ 12Mbps)	
Max. Node/network	126 Station	
Max. Node/segment	32 Station	
Max. I/O data	1kbytes	7kbytes
Communication parameter setting	Parameter setting by using GMWIN *High Speed Link* parameter and SyCon-PB	
Configuration Tool	SyCon-PB	
Configuration port	RS-232C Configuration Port support	

5.3 Basic Performance

5.3.1 Overview

Profibus-DP Master module is available to set as the following function.

1) Supports only *High Speed Link* communication.
2) Uses parameter setting in GMWIN/KGLWIN and Configuration Tool(LGIS provided Tool : SyCon).
3) Sets only sending/receiving area from GMWIN/KGLWIN highs speed link parameter setting.
4) Sending/receiving data shall be saved continuously from the setting area and sent. (this is similar to the continued MAP of MASTER-K.)
5) Uses SyCon to set sending/receiving number and slave area per slave station and uses Configuration Port to dselfload as master module.
6) Sending/receiving number is available up to 512bytes/3,584bytes respectively according to the type of Daughter board.
7) Sending/receiving number per slave station is set as byte unit.(set in SyCon)
8) Communication begins through GMWIN/KGLWIN *High Speed Link* enable set.

5.3.2 Operation by *High Speed Link*

1) If Master module is the product of LGIS (G3/4/6L-PUEA, G3/4/6L-PUEB), it configures Profibus Network using SyCon.
2) It dselfloads Profibus Network Configuration as master module.
3) It sets *High Speed Link* parameter of master in GMWIN and dselfloads it.
4) It performs *High Speed Link* enable set.
5) If using other maker's product as Master, it configures Profibus Network using Configuration Tool of the corresponding product.

5.3.3 SyCon

If using master module provided by LGIS (G3/4/6L-PUEA, G3/4/6L-PUEB), it is required to configure Profibus Network using SyCon and dselfload the information to the corresponding master module. As Profibus Network Configuration Tool is different from each master module, if using LGIS master module (G3/4/6L-PUEA, G3/4/6L-PUEB), it is required to use only SyCon.

SyCon execution

If there is no project using before executing SyCon, the initial screen same as the above figure will appear and if you are preparing the project, the latest project will be open.

Initial screen

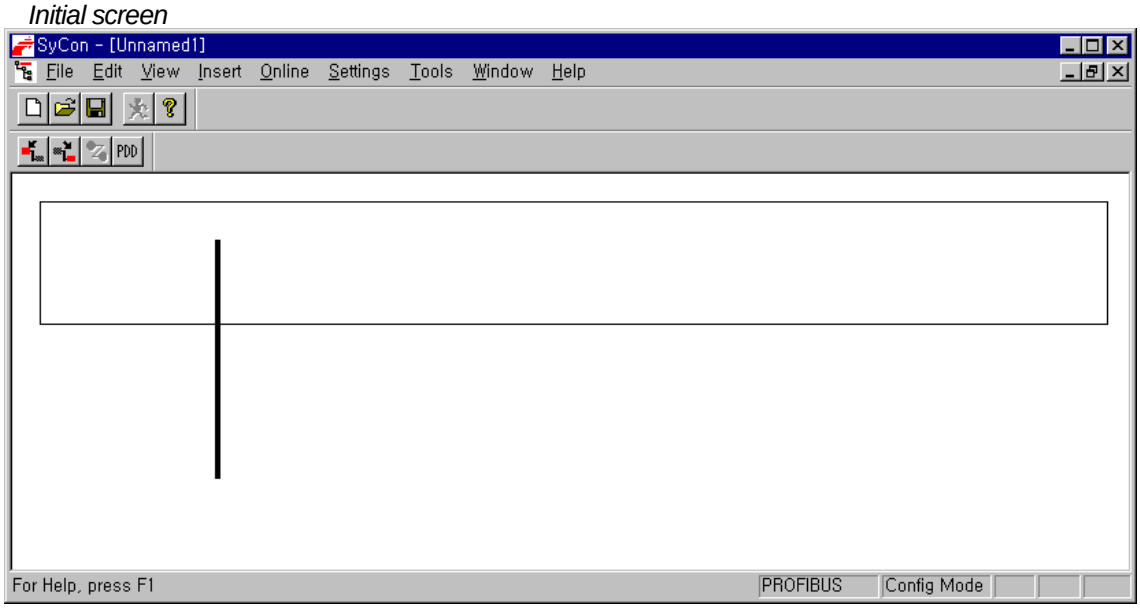

5.3.4 Insertion of Master Module

Select from the left top tool bar and click the proper point of left top from the window below.

Tool bar

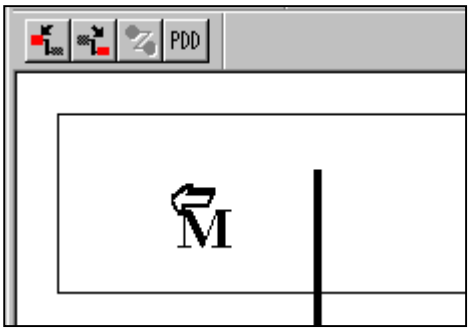

If Insert Master window is open as shself in the figure, select **COM-DPM/PKV20-DPM** if the using master module is **G3/4/6L-PUEA** and click Add button in the middle part. If the using master module is **G3/4/6L-PUEB,** select **COM-PB/PKV20-PB** and click Add button in the middle part. Confirm Station address and if necessary, it is available to change Description. If pressing OK button, master module shall be inserted.

Master Insert

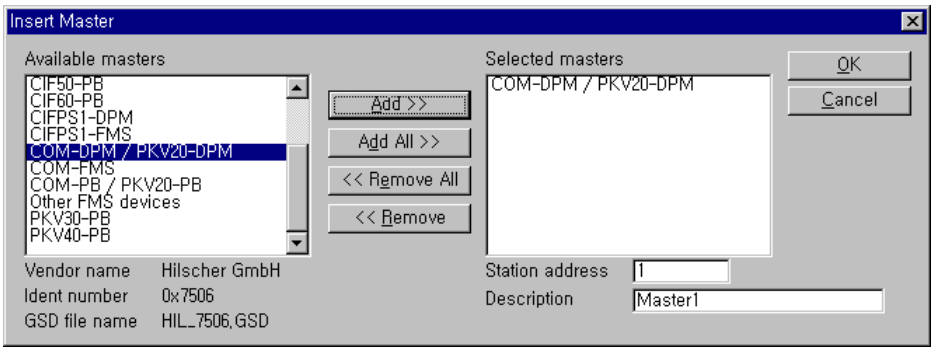

Inserted master module

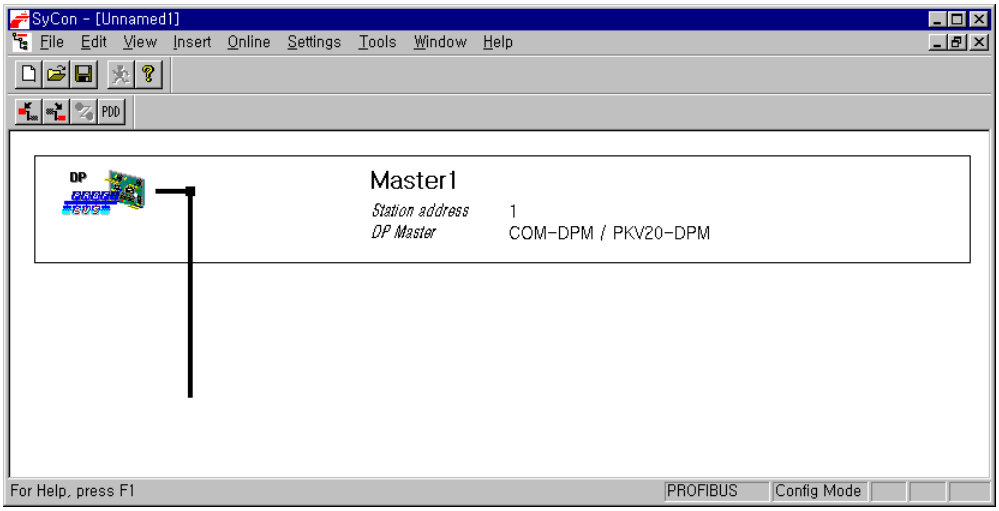

5.3.5 Master Module Setting

If you click the right side of mouse on the inserted master module and select “Master Settings...” from the appeared popup window, the following window will be open. Select “Controlled release of the communication by the application program” from “Parameter to user interface”, “Little Endian (LSB-MSB)” from “Storage format (word module)” and select ”Buffered, host controlled” from “Handshake of the process data” in order.

Master Module Setting

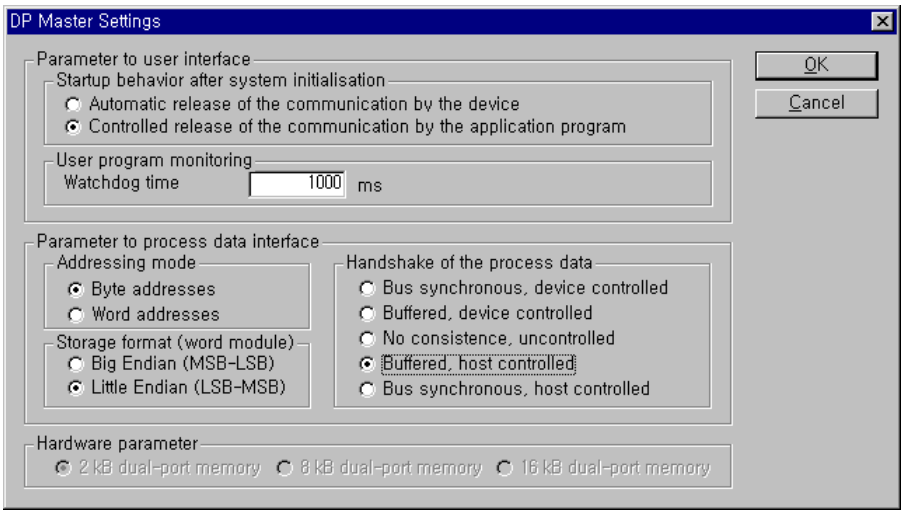

5.3.6 Insertion of Slave

Similar to master, select from left top tool bar and click master bottom, and Insert Slave window will appear as below.

Slave insert

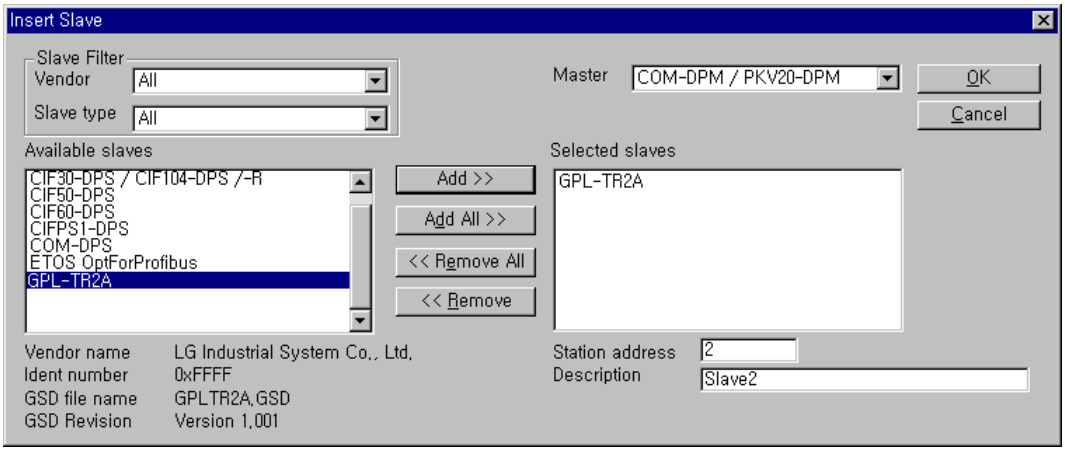

If using GPL-TR2A, select “GPL-TR2A” from the left side “Available slaves” and click “Add” button in the middle part. If there are several masters, select one from the right side “Master” and confirm “Station address” and “Description” and then click “OK” button.

Remark

1) If there is no slave to use in the slave list (Available slaves) of insert slave window, copy “GSD file” which is the original self-information supplied by the module manufacturer, from the directory below and then try again Sycon and insert slave.

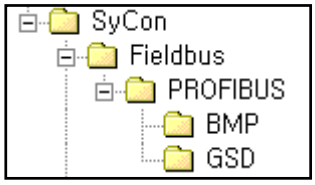

5.3.7 Slave Configuration

Click the inserted slave icon with the right button of mouse and select “Slave configuration” from the appeared popup window. (or double-click the left button of mouse on the slave icon.)

Slave Configuration

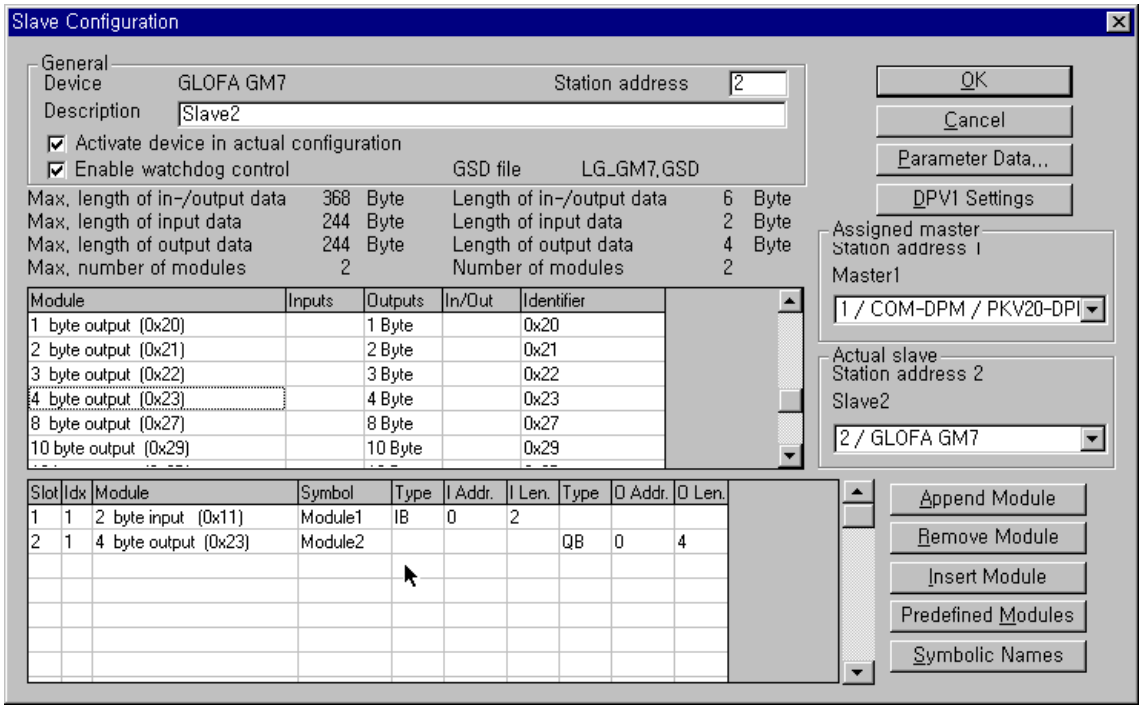

List box in the middle part shows all available module. If you select the module having the necessary *point* and click “Append Module” button on the right bottom, it shall be inserted to the list box below. In this case, it is required to insert input module first and then insert output module in the bottom. And the number of available module are 2.

5.3.8 Bus Parameter Setting

Bus Parameter Setting

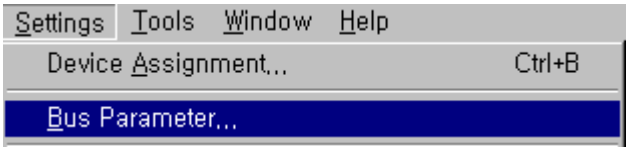

Bus parameter setting is the setting about Profibus-DP network. Select “Settings/Bus Parameter...” from the menu. Optimize field contains “Standard” and “user definition” setting and speed setting (Baud rate) contains 9.6kbps ~ 12Mbps setting. **Basically, Baud rate is set as 1.5Mbps and Optimize is set as ‘standard’.**

Bus Parameter

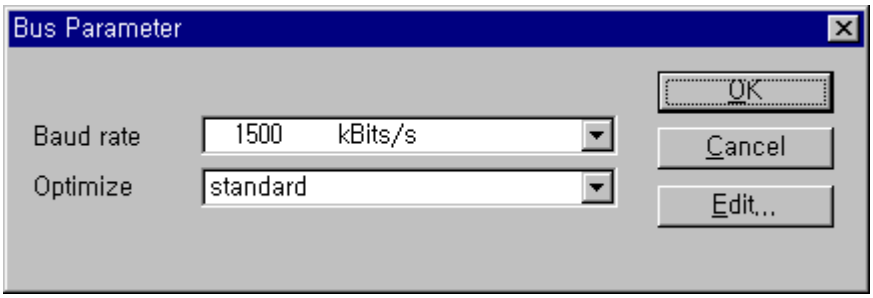

Remark

1) Communication speed is related to transmission distance.
2) When using 12Mbps, you should use the connector only for 12Mbps and exclusive cable.
3) When using 12Mbps, min. Distance between stations shall be set as more than 1m.
4) When using 12Mbps, if the communication is cut off (especially, the station far from master), search the proper end resistance value and set it random.

5.3.9 Device Allocation

It is required to dselfload the prepared configuration to the master module. In this case, click the left button of mouse and select master module icon to set which device to use. Select "Setting/Device Assignment..." from the menu.

Device Allocation

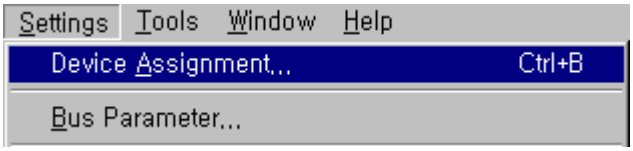

Driver Selection

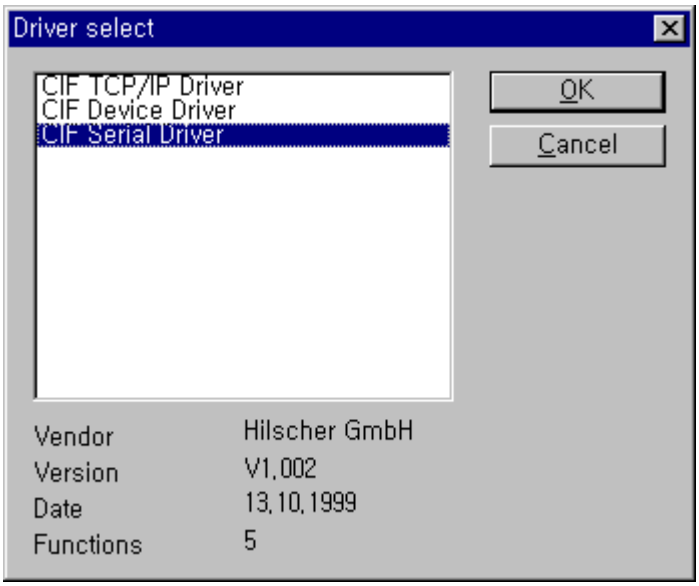

If driver selection window is open, select "CIF Serial Driver".

Remark

1) Driver to be provided by G3/4/6-PUEA/B type master module is only RS-232C port. Thus, "CIF TCP/IP Driver", "CIF Device Driver" is not available.

Driver Selection of CIF Serial Driver

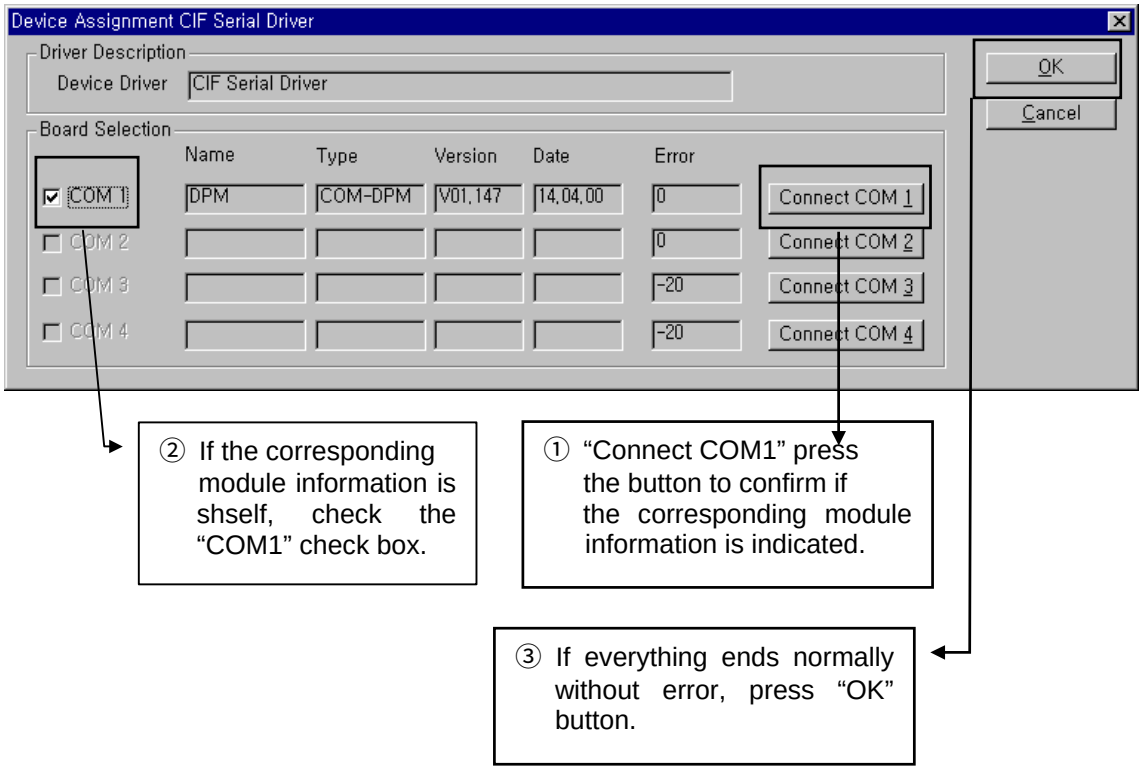

This connects PC serial port and Configuration Port of Profibus-DP master module and applies the power of master module. Press "connect COM1" or other button according to PC serial port and confirm if the corresponding module is selected. In the figure, "version" and "Date" may have different value. If there is no error, check the check box of the left side and click "OK" button.

Remark

1) When pressing "Connect COM1" button, if the module information does not appear normally and the error occurs, check the connection of cable for configuration and the cable condition first.
2) If Cable is OK, it means that module must be poor. In this case, contact to the customer service center.

5.3.10 Configuration Download

If you select “Online/Dselfload” from the menu, ‘dselfload’ begins to run. In this case, all LED shall be OFF and only “READY”LED shall be blinking. After dselfload, all LED show its self function. If you carry out ‘dselfload’ in the status that the communication between the current master and slave is open, the warning window with the message **“if the dselfload is done during the bus operation, the communication between the master and the slaves is stopped.”** will appear. After confirming if there is a problem by communication cutoff, click “Yes(Y)” button and ‘dselfload’ will run normally.

Configuration dselfload

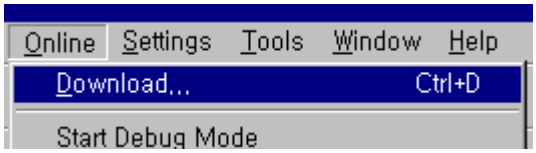

Dselfload processing window

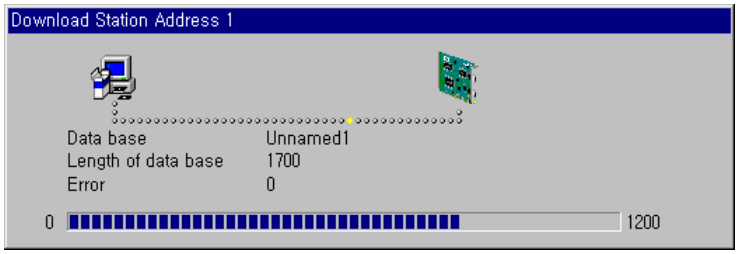

Warning message

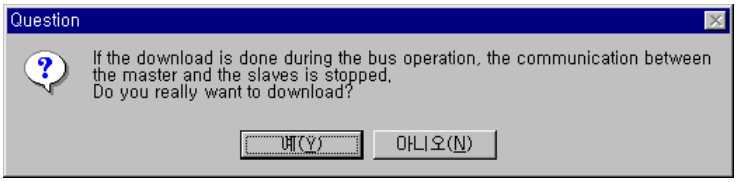

5.3.11 *High Speed Link* Parameter Setting in GMWIN

In the previous article, we explained the method to set Configuration and the method to dselfload this to the master module. ***High Speed Link* parameter setting should be done after dselfloading Configuration** and *High Speed Link* parameter selects link parameter from GMWIN project screen and sets the corresponding items and the setting order and its function per item are as follows.

1) *High Speed Link* parameter setting in GMWIN

Open *High Speed Link* parameter from Project basic screen and enter into the *High Speed Link* parameter setting menu.

High Speed Link parameter basic screen

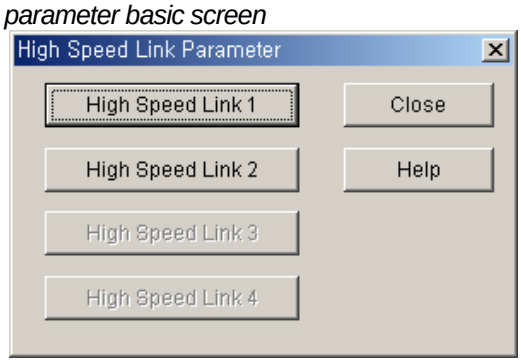

High Speed Link item of the above figure means max. Installation number of communication module according to PLC CPU type. *High Speed Link* button available for setting is active and in this case, *High Speed Link* no. is not related to the installed slot no. and the slot no. should be set in the individual parameter setting screen and only one *High Speed Link* parameter is available to set for one communication module.

Max. Installation number per GLOFA-GM CPU model

Classification	Available communication module	Max. Installation number	Remarks
GM3-CPUA	G3L-PUEA, G3L-PUEB	4	If combined with other communication module using HS link, installation number shall be limited.
GM4-CPUA/B	G4L-PUEA, G4L-PUEB	2(A type)/4(B type)	
GM6-CPUA/B/C	G6L-PUEA, G6L-PUEB	2	

2) Link parameter setting

If you select the corresponding parameter from parameter setting basic screen, the *High Speed Link* parameter setting initial screen will appear as shself in the following figure.

Parameter setting initial screen

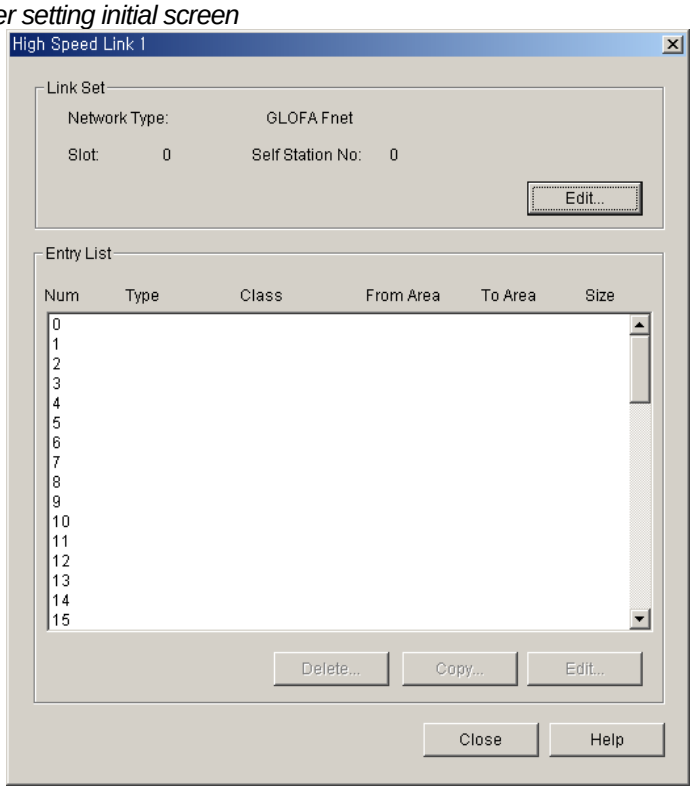

Parameter setting initial screen is composed of two items such as 'link set' and 'Entry list' and the setting method per each item and its function is as follows.

(1) *High Speed Link* setting

High Speed Link setting is the item to set the basic items of the desired communication module to set. Select 'modify' button of link setting and set module type, slot no. the self station no. from *High Speed Link* setting screen respectively.

High Speed Link set screen

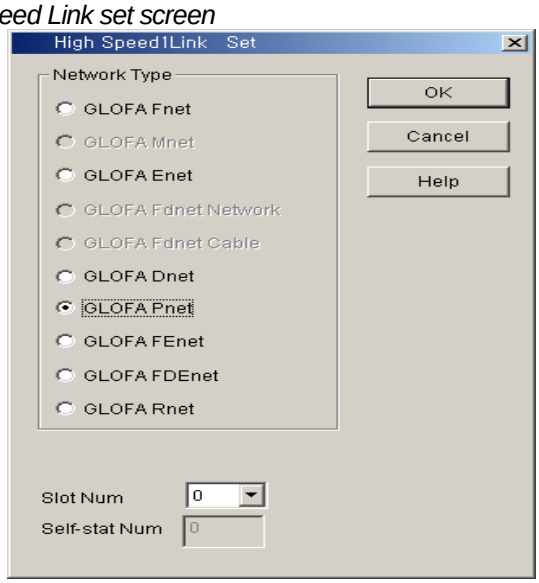

- Network type : It sets the installed communication module type and GLOFA Pnet should be set.
- Slot no. : It sets the position that the communication module to set is installed. (0 ~ 7 slot).
- The self-station no. : The master module shall be set in SyCon and the slave module shall be set by rotary switch. It is not available to change here.

(2) Entry List setting

Registration list is the area to register the sending/receiving information of actual data and after link setting, it is required to set in the registration no.'0' of Entry list area and the major setting items are shself on the top of registration list menu. Select (or doubleclick) the corresponding list from *High Speed Link* setting screen and the user can set the corresponding item from *High Speed Link* item modification window as shself on the figure below.

High Speed Link item modification screen

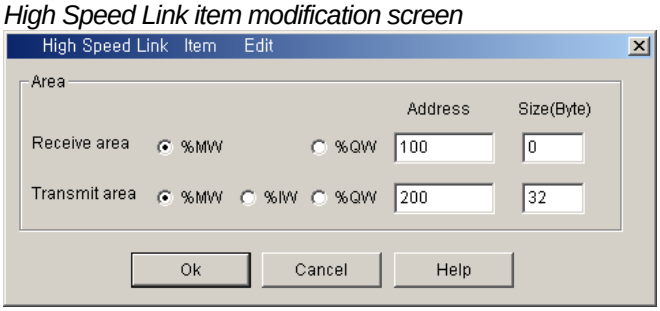

The following shows the screen after setting the sending/receiving parameter. Doubleclick the corresponding registration no. to modify the parameter.

Sending/Receiving parameter setting completion screen (example)

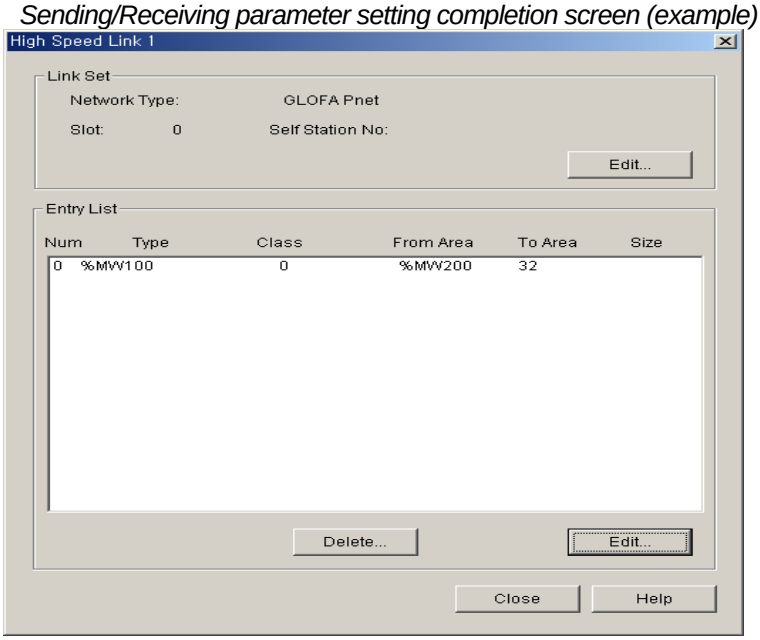

The function of each registration item is as follows.

- Area : When sending, set the area to read the data to send and set the storage area of the received data when receiving.
- Size : This means the data size to send/receive and the unit is 1 byte and it is available to set total sending/receiving as 1kbytes for G3/4/6L-PUEA and 7kbytes for G3/4/6L-PUEB.

Remark

1) The size of sending/receiving area is total I/O contact number made in SyCon.
2) The order of programming is carried out as G4L-PUEA 1 and GPL-TR2A(16 points), GPL-TR4A(32 points), GPL-D22A(16 points) and when setting the sending area as %MW0, the receiving area as %MW100,
   - Sending area : %MW0
   - Receiving area : %MW100
   - Size of sending area : 6 bytes (total output contact number)
   - Size of receiving area : 2 bytes (total input contact number)

   And,
   - %MW0 data -> GPL-TR2A output
   - %MW1 ~ %MW2 data -> GPL-TR4A output
   - GPL-D22A input -> %MW100 saving
3) The setting order programmed in SyCon has the priority when sending/receiving the data than station no. and cable connection.

5.3.12 *High Speed Link* Information in GMWIN

1) *High Speed Link* information function

High Speed Link service provides the user with the method to confirm *High Speed Link* service status to confirm the reliability of the data read from other station through *High Speed Link* as *High Speed Link* information because this is data exchange between more than 2 communication stations.

That is, the communication module provides the user with the high link information every regular time by collecting all data received until then about whether the *High Speed Link* action is done by the parameter set by the user or not. The *High Speed Link* information contains the overall information such as RUN-LINK (_PHSxRLINK), LINK-TROUBLE (_PHSxLTRBL) that provides the user with overall information of communication network and the individual information such as _PHSxSTATE that informs the communication status per slave station. The user can use the above information as keyword type when preparing the program and monitor the *High Speed Link* status by using the *High Speed Link* information monitor function. When operating several PLC using *High Speed Link*, it is required to confirm the reliability of the sending/receiving data using the *High Speed Link* information such as RUN-LINK, LINK-TROUBLE etc.

(1) Run-Link (_PHSxRLINK)

This is the overall information that shows whether or not *High Speed Link* is running normally by the parameter set by the user. Once 'ON', it maintains 'ON' until link enabe is 'OFF' and if the following condition is given, it shall be 'ON'.

① When 'Link Enable' is 'ON'.
② When parameter registration list setting is set normally all.
③ When sending/receiving all data that corresponds with parameter registration list within the setting period.
④ When all other station status set in the parameter is 'RUN' and at the same time there is no error.

High Speed Link system configuration

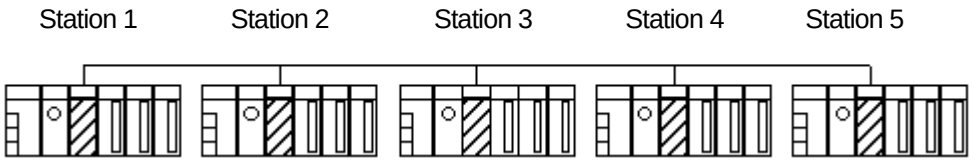

Example of High Speed Link parameter setting of each station

Station 1	Station 2	Station 3	Station 4	Station 5
sending:2 words receiving: 2words (station 2) receiving:2words (station 3)	sending:2words receiving:2words (station 1) receiving:2words (station 4)	sending:2words receiving:2words (station 1) receiving:2words (station 5)	sending:2words	sending:2words

The figure shows *High Speed Link* system configuration to explain RUN-LINK ON condition. In case that 5 communication modules are connected by network as shself on the above figure and carry out *High Speed Link* as the content of parameter, RUN-LINK ON condition of Station 1 is as follows.

① When in the self station (station 1), Link-Enable is 'ON',
② When the self station (station 1) is RUN status,
③ When the self station (station 1) is not the error status,
④ When the sending parameter data set in the self station (station 1) is sent properly,
⑤ When the data receiving from station 2,3 is received properly,
⑥ When the action mode of other station (station 2, 3) to send the data to the self station (station 1) is RUN mode and not the error status and it is communicated properly,
⑦ When in the other station (station 2,3) of the self station (station 1), the action mode of other other station (station 4,5) set in the parameter is RUN mode and not the error status and it is communicated properly.

If the above 7 items are satisfied, RUN-LINK of station 1 shall be ON. If using RUN-LINK contact associated with program in the system where PLC of various stations performs interlocking through *High Speed Link*, it is available to carry out the mutual monitoring of sending/receiving data and the reliable communication. But, once RUN-LINK contact is 'ON', it maintains 'ON' status until Link-Enable becomes 'OFF'. Thus when monitoring the abnormal status such as communication error, it is required to use 'LINK-TROUBLE ' information contact together as follows

(2) LINK-TROUBLE (_PHSxLTRBL x=*High Speed Link* no.(1~2))

This is the overall information indicating whether the *High Speed Link* is running normally by the parameter set by the user. When RUN-LINK violates the condition of RUN-LINK ON in the status that RUN-LINK is ON, LINK-TROUBLE shall be 'ON' and if recovered, it shall be 'OFF'.

(3) *High Speed Link* status (_PHSxSTATE[0..127] x=the salve station no. (0~127))

This is the individual information indicating the action status of the slave station and this is available to indicate max. 127 stations *High Speed Link* status same as max. slave station number. That is, if the sending/receiving status of the corresponding list is normal and the action mode is RUN and there is no error, it shall be 'ON and if violating the above condition, it shall be 'OFF'.

2) *High Speed Link* information monitoring

High Speed Link information enables to monitor using the monitoring function after GMWIN online connecting. There are two kinds of method to monitor : the method to select 'variable monitor' from monitor menu and the method by link parameter monitor.

(1) Variable monitor

The variable monitor is the function to monitor by using GMWIN flag monitor function and selecting the necessary item. If you select 'variable monitor' from online monitor item, the variable registration screen will appear as below. Select the flag and register by selecting directly the *High Speed Link* information flag from variable, flag list screen one by one. In this case, as PHSxSTATE[n] is Array type flag, the user should select the array no. directly and the array no. means the slave station no. 'x' means the *High Speed Link* no. and it has the range 1~4 for GM3 PLC CPU, the range 1~2 for GM4 PLC CPU and the range 1 for GM6 PLC CPU. If you register the variable in the figure below and select 'close', the monitor screen will appear and if you press 'start' from tool box shself on the right side separately, it begins to monitor.

High Speed Link information variable registration screen

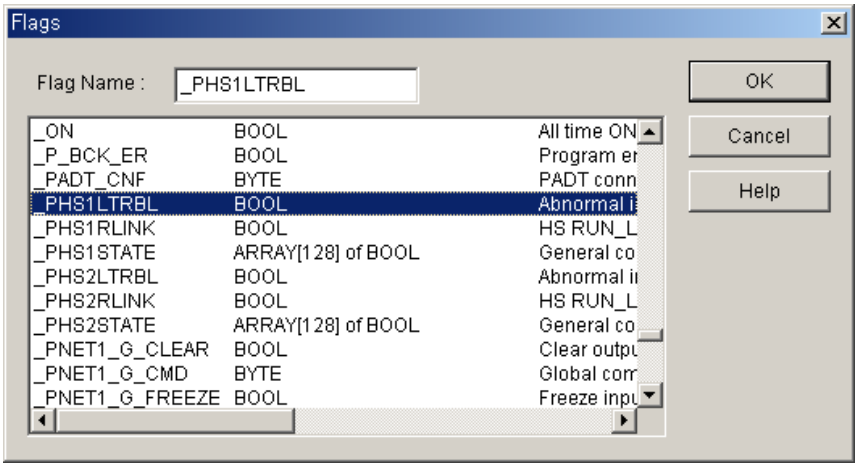

High Speed Link information monitor screen (Variable registration)

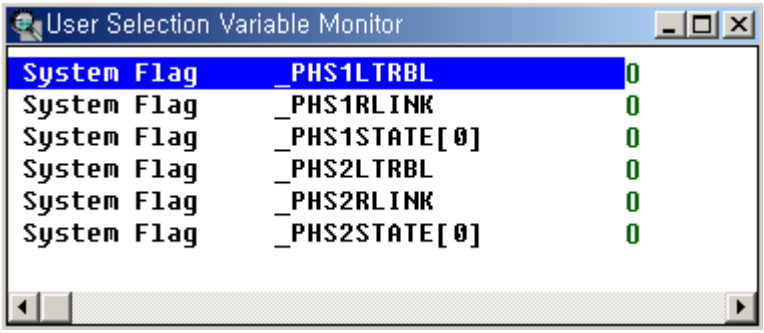

(2) Link parameter monitor

If you select 'link parameter' item from monitor menu of GMWIN online connection, 'select link parameter' screen will appear as shself on the figure below. If the user selects the desired item from parameter number set by himself and verify it, the *High Speed Link* parameter monitor screen will be open and the setting registration list will be monitored and indicated on the screen.

Link parameter selection screen

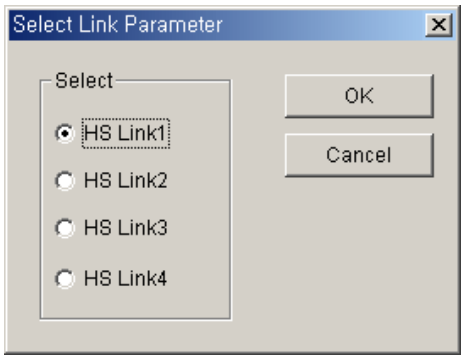

Link parameter monitor indicates the general information such as RUN-LINK, LINK-TROUBLE on the right top and the individual information for mode (action mode), communication (sending/receiving status), error with registration list no.

High Speed Link parameter monitor screen

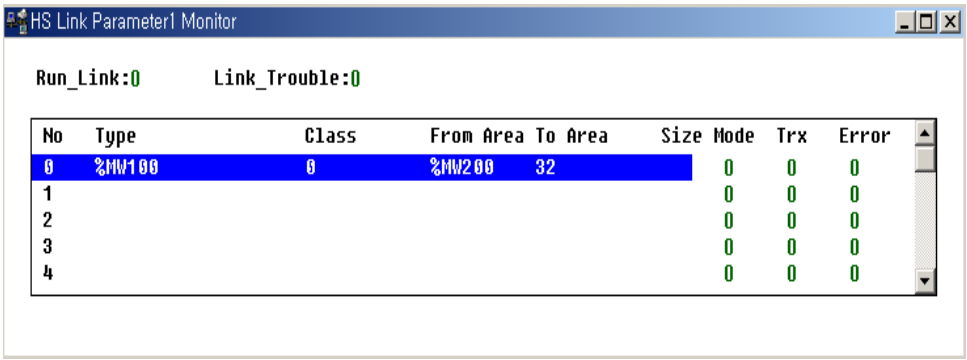

If selecting the *High Speed Link* information monitor as shself on the above figure, the *High Speed Link* parameter and information set by the user will be monitored together. And it is available to monitor the *High Speed Link* status with I/O data as the individual information setting value is monitored together.

5.3.13 *High Speed Link* Parameter Setting in KGLWIN

Profibus-DP master for MASTER-K also uses SyCon for the Configuration setting and the setting method is the same as that of GLOFA-GM. In case of MASTER-K, it should be required to set the *High Speed Link* parameter after dselfloading the Configuration to the master module and the *High Speed Link* parameter selects the parameter from KGLWIN project screen and set the corresponding item. The setting order and the function per item are as follows.

1) *High Speed Link* parameter setting in KGLWIN

If selecting 'parameter' from the following project basic screen, the *High Speed Link* parameter basic screen will appear and you can select the corresponding item.

KGLWIN project basic screen

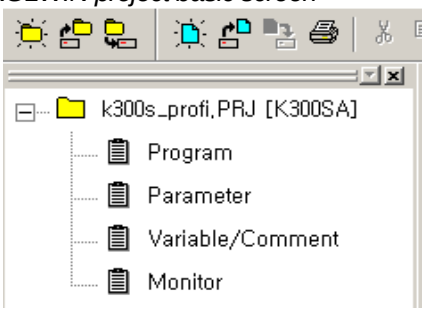

2) *High Speed Link* parameter selection

A) Setting method

Select the corresponding parameter from the basic screen as shself on the figure below and enter into the parameter setting.

Parameter setting basic screen

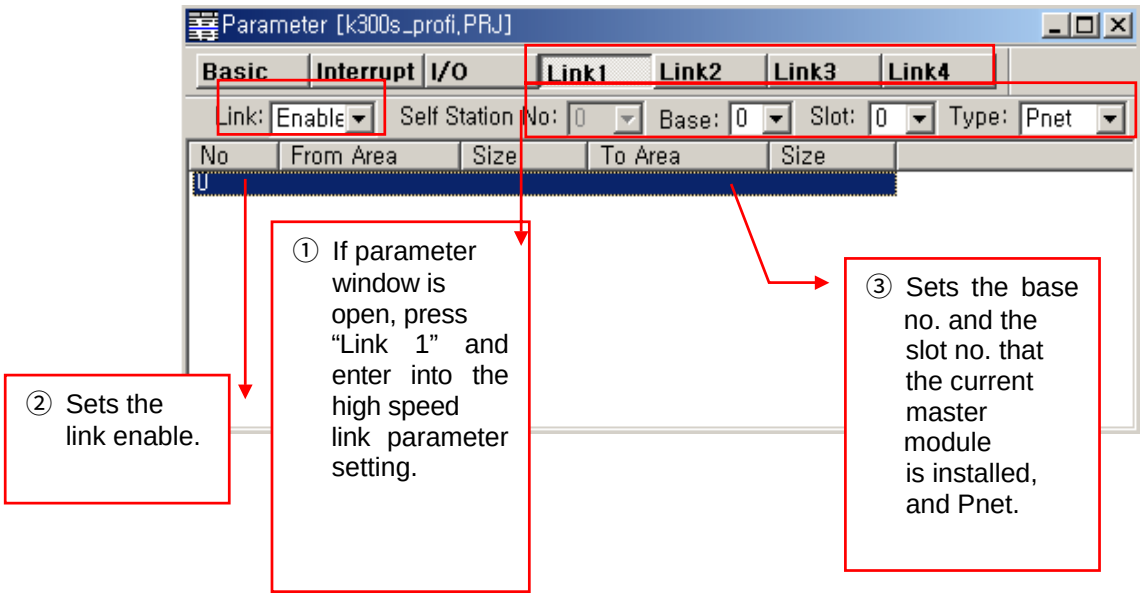

The *High Speed Link* item tab of the above figure means max. installation number of communication module according to PLC CPU type. The *High Speed Link* button as much as the available setting number shall be active and in this case, the *High Speed Link* no. is not related to the installed slot no. and the slot no. shall be set in the individual parameter setting screen and only one *High Speed Link* parameter is available to set for one communication module.

The following table shows the communication model available to install per MASTER-K CPU model and max. installation number.

Max. installation number per MASTER-K CPU model

Classification	Available communication module	Max. installation number	Remarks
K1000S CPU	G3L-PUEA, G3L-PUEB	4	
K300S CPU	G4L-PUEA, G4L-PUEB	2 /4(more than Version 3.0)	

** If combined with other communication module using the High Speed Link, the installation number shall be limited.*

- Link : This is the item to allow the *High Speed Link* and the initial value is prohibited and it is required to set 'enable' to execute the *High Speed Link*.
- The self station no. : Master module is set in SyCon and the slave module is set as rotary switch. It is not available to change here.
- Base : It sets the base position that the communication module to set is installed.
- Slot : It sets the position that the communication module to set is installed. (0 ~ 7 slot).
- Type : It sets the type of the installed communication module and sets the Pnet.

3) Parameter setting and modification

If you doubleclick the corresponding parameter from the parameter setting basic screen as shself on the figure below, the *High Speed Link* parameter setting screen will appear.

Parameter setting initial screen

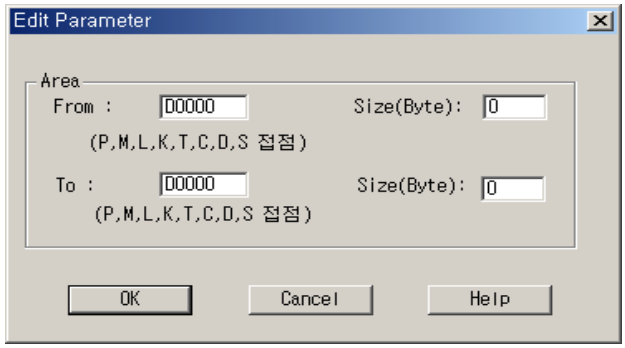

- Area : When sending, set the area to read the data to send and set the storage area of the received data when receiving.
- Size : This means the data size to send/receive and the unit is 1 byte and it is available to set total sending/receiving as 1kbytes for G3/4/6L-PUEA and 7kbytes for G3/4/6L-PUEB.

Remark

1) The size of sending/receiving area is total I/O contact number made in SyCon.
2) The order of 작화 is carried out as G4L-PUEA 1 and GPL-TR2A(16 points), GPL-TR4A(32 points), GPL-D22A(16 points) and when setting sending area as P000, the receiving area as P010,
   - Sending area : P000
   - Receiving area : P010
   - Size of sending area : 6 bytes(total output contact number)
   - Size of receiving area : 2 bytes(total input contact number),

   And,
   - P000 data -> GPL-TR2A output
   - P001~P002 data -> GPL-TR4A output
   - GPL-D22A input -> P010 saving.

   - %MW1 ~ %MW2 data -> GPL-TR4A output
   - GPL-D22A input -> %MW100 saving

3) The setting order programmed in SyCon has the priority when sending/receiving the data than station no. and cable connection.

Chapter 6 DeviceNet Communication

6.1 Overview

DeviceNet was born to meet the demand to replace the high-cost analog 4~20mA standard with simple digital standard and is the communication link to connect various kinds of industrial devices such as limit switch, photo electronic sensor, motor controller, inverter, barcode reader, panel display etc. to the network. The characteristics is low cost, simple installation, excellent compatibility with other maker's device as well as outstanding application in the network application such as Master/Slave, Multiple Master, Peer-to-Peer etc. As DeviceNet uses CAN (Controller Area Network) protocol as it is and system response time is short, and the reliability is high, the production cost shall be low as we can use CAN chip with low cost.

DeviceNet Smart I/O module has the following characteristics.

- The real time control is available to communicate various I/O machine that is the lowest in the network system.
- One master module can control 63 slave module and max. 2,084 points I/O control is available.
- Network installation is flexible as multi drop and T branch connection is available.
- Available to connect the master module of LGIS and various slave module of other maker.
- Available to configure the system with the slave module of LGIS and other maker's master module.
- Available to set station number (MAC Address) with hardware. (0 ~ 63 stations).
- The communication speed is set automatically according to the master setting.
- Available to install 2 master modules in GLOFA-GM4 and GM6.
- Available to communicate by *High Speed Link* parameter setting.
- Available to connect with various slave I/O.
- Supports Poll, Cos, Cyclic, Strobe method as communication method.

It is used widely for general I/O, actuator, near-by switch, light switch, valve, inverter, A/D module, D/A module, position control etc.

6.2 Communication Specification

1) Frame Specification

Items			Performance Specification
Transmission specification	Communication speed		125/250/500kbps
	Communication distance (Thick)[*1]		500/250/100m
	Max. drop length	125 kbps	6m(max. extension 156m)
		250 kbps	6m(max. extension 78m)
		500 kbps	6m(max. extension 39m)
	Data packet		0~8 Byte
	Network structure		• Trunk/drop line • Power in the same network/signal cable
	Bus method[*2]		• Multi slave/ multi casting • Peer-to-Peer method • Poll, Strobe, COS/Cyclic method
	Max. node number		Max. 64 MAC ID/MAC Identifier 32 I/O per node (max. 2,048 I/O)
	System type		Node insertion and removal in the status of voltage ON.
	Action voltage		DC 24V
	Diagnosis function		The duplicate station check /bad station monitor /CRC error Check

Remark

1) The transmission distance of Smart I/O module is in inverse proportion to data transmission ratio and when using Thin cable, the transmission distance is limited to 100m regardless of data transmission ratio.
2) For cable manufacturing and installation, please contact and discuss with the experts.

6.3 Communication Parameter Setting

DeviceNet should set generally the slave station that the master module will communicate with and set the station number, communication method, data size to communiction, communication period necessary for the communication with the slave in order to enable to communicate. The files set as above are called “Scanlist file” with which the master module communicates with the slave module. Thus, after setting the Scanlist file such service type, communication speed, station number etc. from *High Speed Link* parameter edit menu, Dnet I/F module begins to communicate by receiving all the setting Scanlist file from CPU.

In order to communicate with SMART I/O DeviceNet module, *High Speed Link* communication service is used. This function is used when changing the data and information of other station periodically at every specified time. By referring the changing data of the self-station or other station periodically each other, it enables to utilize the data to the system effectively and carry out the communication by setting the parameter simply.

The parameter setting method is to designate its own area and the area of other station to send or receive and data size, message type, station no. in GMWIN *High Speed Link* parameter and then carry out the communication. Data size is available to communicate at least 1byte up to 256bytes(2,048 points) and the communication period is available to set min. 5ms up to 10sec. according to the communication contents. As it is available to communicate with other station by simple parameter setting, it is easy to use this program and the high speed process of internal data enables to process lots of data at the same time periodically.

The following table shows *High Speed Link* point per communication model.

Max. Communication Point per model

Classification		Max. communication point	Max. block no.	Others
SMART I/O module	GDL-TR2A	16 points	64 (0-63)	Output module
	GDL-TR4A	32 points	64 (0-63)	Output module
	GDL-RY2A	16 points	64 (0-63)	Output module
	GDL-DT4A	32 points	64 (0-63)	Combined module
	GDL-D22A	16 points	64 (0-63)	Input module
	GDL-D24A	32 points	64 (0-63)	Input module

Remark

1) For further information for master setting, please refer to the user’s manual for DeviceNet.
2) In case of GDL-DT4A, do not set as Strobe method among communication method.

6.3.1 *High Speed Link* Service

SMART I/O Dnet module sets its own station no. to communicate with the master module by using the rotary switch and the communication speed is set automatically according to the master module setting. To control the single type remote module, it is available to communicate only by *High Speed Link* parameter setting in GMWIN and easy to interface with the module of LGIS and other maker's.

The following table shows the basic configuration of the single type remote module.

Specification of single type remote module

Module name			Contents	Service mode
GLOFA-GM		GDL-TR2A	TR output 16 points	Poll, Strobe, COS/Cyclic service
		GDL-TR4A	TR output 32 points	
		GDL-DT2A	DC/TR combined 16 points	
		GDL-D22A	DC input 16 points	
		GDL-D24A	DC input 32 points	
		GDL-RY2A	Relay output 16 points	
Other maker's example	OMRON	DRT1-OD08	TR output 8 points	Poll service
	A.B	1794-OB16	TR output 16 points	Poll service
		1794-IB16	DC 24V input 16 points	

ScanList is the communication information data that the user must set so that the master module carres out the predefined communication with the slave module when the power ON. Thus, the user is required to set the information for the slave module to communicate with Dnet I/F module by using *High Speed Link* parameter.

The following describes the method to set the Scanlist by using *High Speed Link* parameter for Dnet communication.

First, select the project file which is suitable for CPU type by using GMWIN and then select *High Speed Link* parameter from the project file and finally select 'high speed link 1'.

High Speed Link parameter selection screen

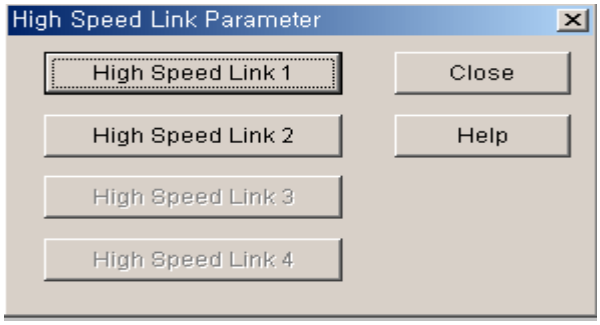

After selecting 'high speed link 1' , select '<-' mark from the below figure to set the slot position that Dnet I/F module is installed, station no, action mode and scan time and poll rate.

Parameter setting initial screen

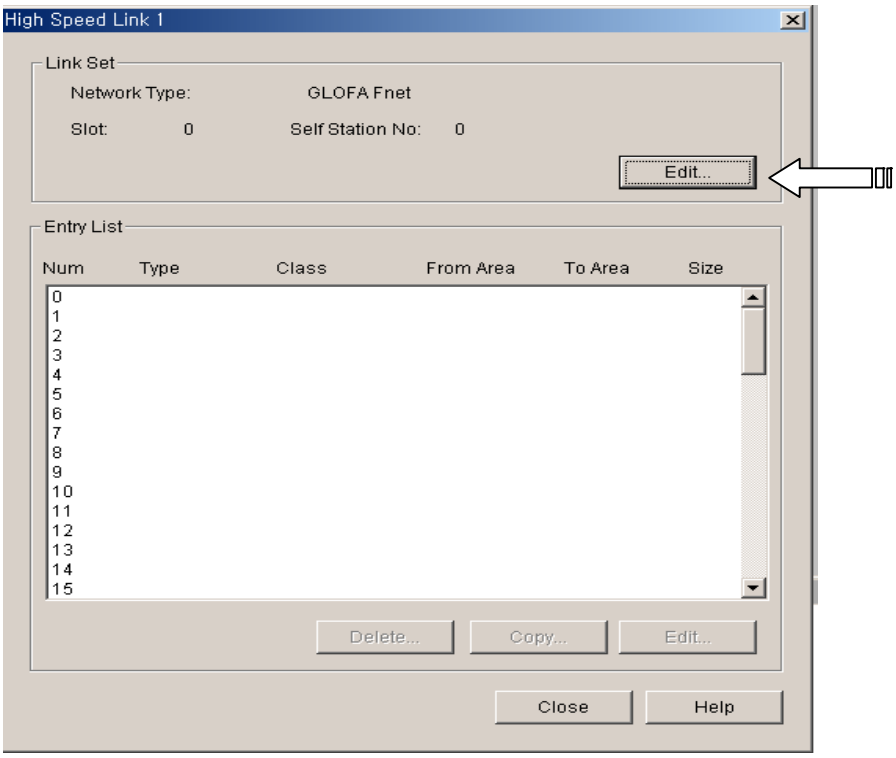

High Speed Link 1 set screen

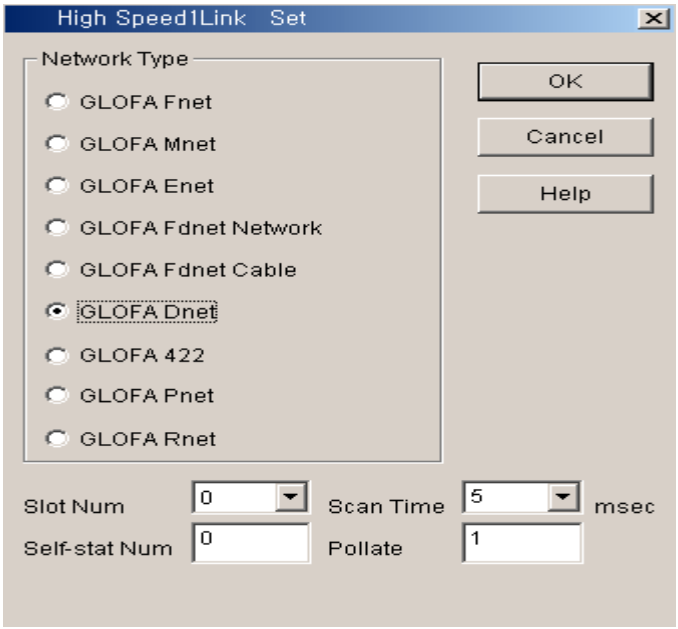

If setting the network type, slot no., self-station number, delay scan time, poll rate etc, the registration list no.'0' shall be set automatically in the self-station and for the registration list no.1~63, the module that the user wants to communicate shall be set.

Mode and Communication area setting screen (GDL-TR2A)

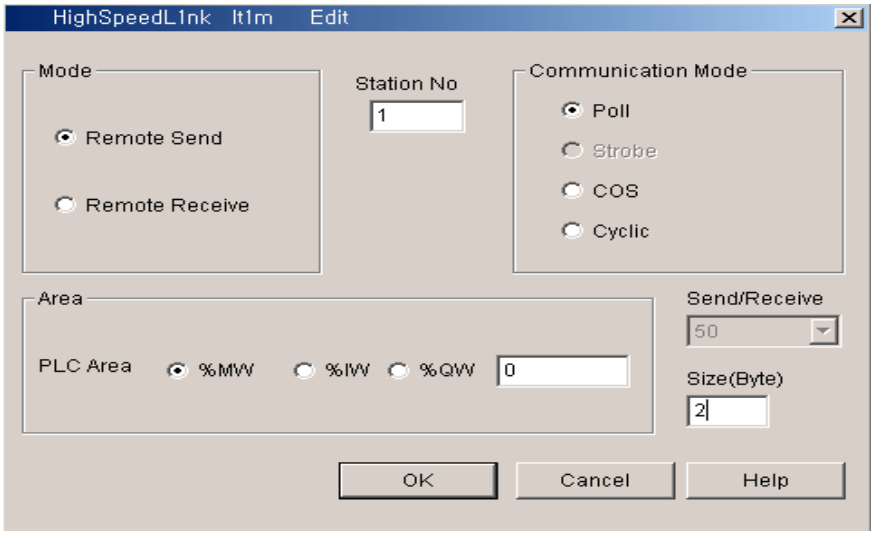

The following describes the sending data setting method of remote I/F output module. From the parameter menu, set the mode by whether or not to send/receive, the station no. by other station no. (remote module), the communication mode by 'Poll', the area by the data area to send and the size shall be 2 byte. The single type I/F module does not have the separate setting items and is controlled by the master module according to the communication speed.

Link setting description

Classification	Description
Network type	This is to set the communication module type by 'GLOFA Dnet'
Slot no.	For the slot no. that the desired communication module to set is installed, select one from the range 0~7. (The right side of CPU module is '0' slot.)
Self station no.	Enter the self-station no. that is set in the station number switch of communication module front side. It is available to set 0~63 by decimal number but it is not allowed to use duplicate station no. as the self station no. is the unique number to distinguish communication module in the same network system.

Scan time	This is the scan delay time (msec) to delay to next scan after Dnet I/F module scanned the slave module all.
Poll rate	This is the rate that Dnet I/F module scans the salve module. That is, if the value is '2', this means that after scanning Dnet I/F module twice, one time 'poll' shall be executed for the module of station number set in the parameter.

In order to communicate with output module (GDL-TR2A/RY2A) among Dnet remote module, it is required to set the sending only. The receiving setting is not required.

High Speed Link parameter setting description (master module setting)

Classification		Description
Mode	Remote sending	Sends the data to SMART I/O output module.
	Remote receiving	Receives the data from SMART I/O input module.
Station no.		Designates the station no. of single type I/F module to communicate.
Communication mode	Poll	Performs Poll service.
	Strobe	Performs Strobe service.
	COS	Performs COS service.
	Cyclic	Performs Cyclic service.
Area	In case of Remote sending mode	Designates the sending data area of the self-station to send to the SMART I/O output module.
	In case of Remote receiving mode	Designates the area of the self-station to save the data received from SMART I/O input module. (%IW area Disable)
Sending/receiving period (msec)		Sets the sending/receiving period of the data.
Size (byte)		Sets the data size to send/receive and in case of communication between self-station, the unit is 2bytes and in case of communication with other makers, the data size shall be set as the byte that the corresponding module requires.

In order to communicate with input module among SMART I/O DeviceNet module, it is required to set the receiving only as shown on the figure. The sending setting is not required.

Mode and Communication area setting screen (GDL-D22A)

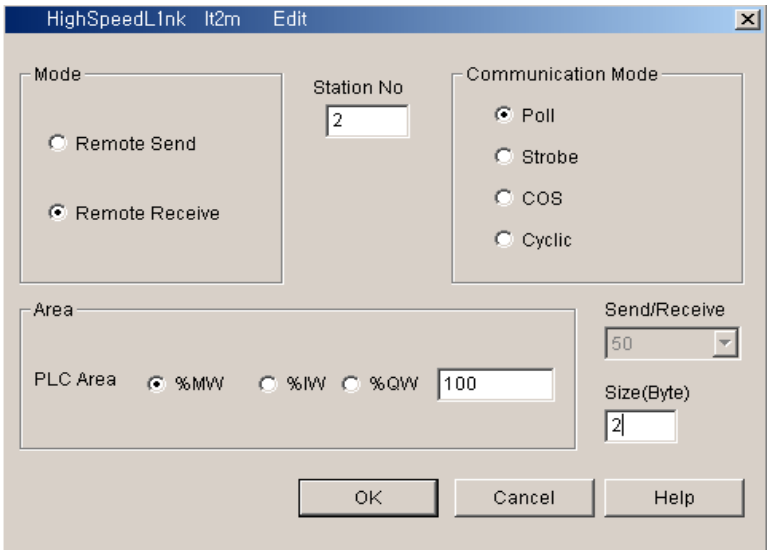

The following shows the setting to communicate with station 1,2 using Poll service.

High Speed Link parameter sending/receiving setting

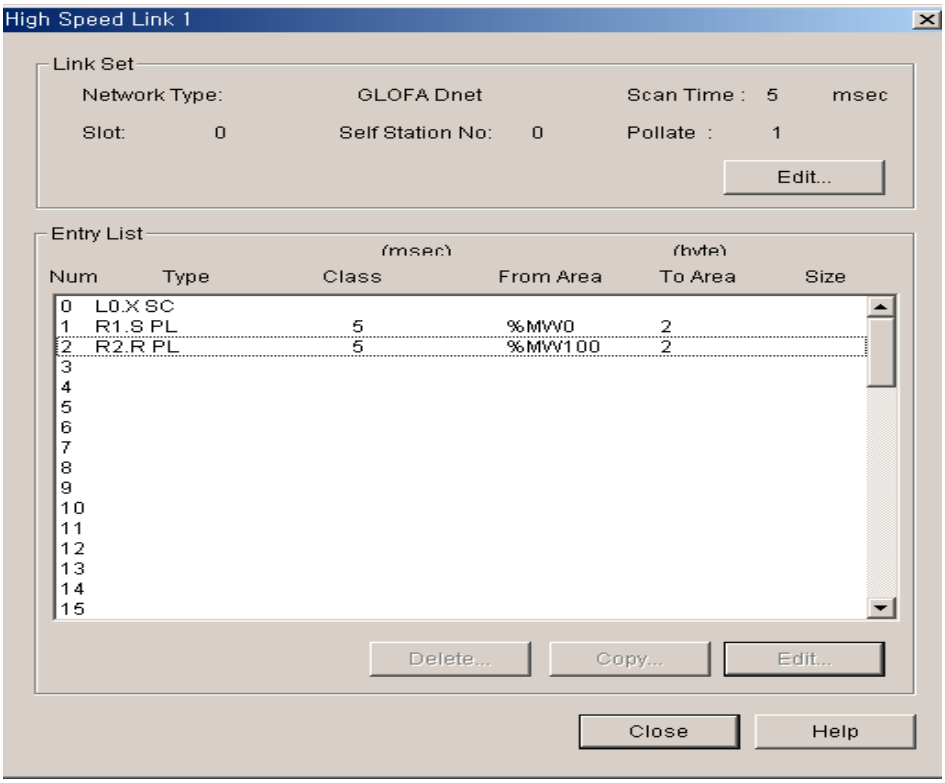

Remark

1) When communicating with the single type I/F module of other maker, the setting method is the same as GLOFA-GM series and only data size shall be set as follows.

   DRT1-OD08 : 1 byte
   1794-OB16/IB16 : 4 bytes

2) In case of connecting the other maker's module (OMRON) that has the different communication speed from the master (G4/6L-DUEA) speed and the Smart I/O simultaneously, it occurs as follows.

G4L-DUEA	OMRON(speed control by manual)	Smart I/O
125kbps	125/250/500kbps	normal action
250kbps	125kps	not connected
250kbps	250/500kbps	normal action
500kbps	125/250kbps	not connected

3) When setting *High Speed Link* in the master (G4/6L-DUEA), in case of the combined module (GDL-DT4A), it is not available to connect if setting only with input. If setting only with output or the combined, the connection shall be done normally.

The meaning of Poll service setting

Scan type	Sending period	PLC area	Size	Description
R1.S PL	5×1 = 5msec	%MW0	2	Sends 2 byte data in %MW0 to the station 1 every 5msec by using Poll Request.
R2.R PL	-	%MW100	2	Saves 2 byte received by station 1 using Poll Response in %MW100.

* Here the sending period is Scan time × Poll rate.

Program Write

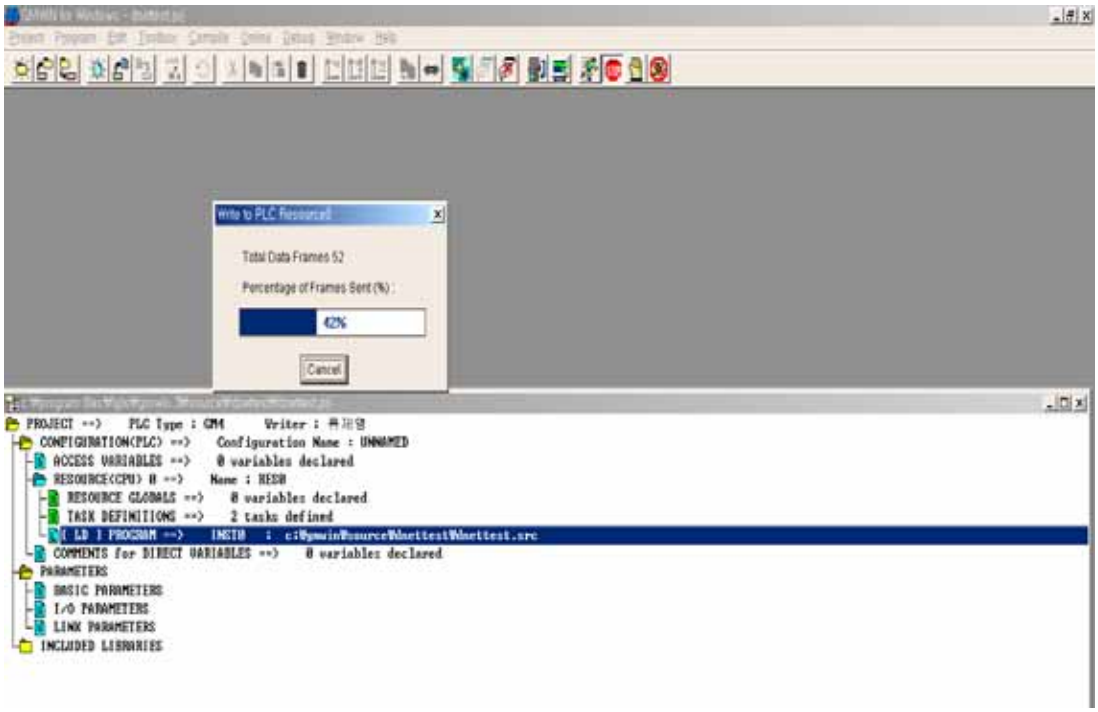

As shown on the above, in order to communicate with Dnet master module and Smart I/O module, the user should check the slave information correctly and then set *High Speed Link* parameter. Thus, after setting *High Speed Link* parameter correctly, the user can download it through the online connection of GMWIN.

High Speed Link Enable link

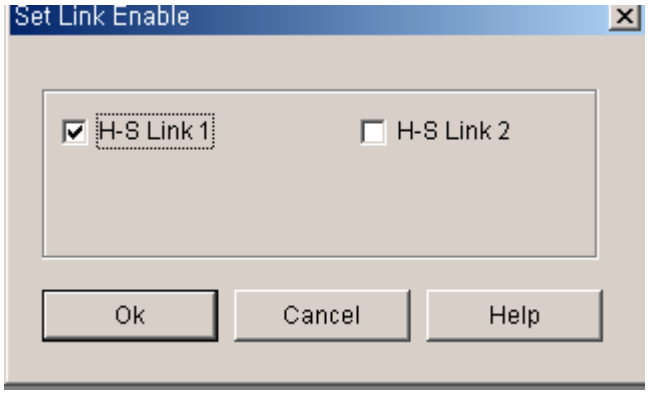

If program download is completed, Enable the 'link enable' setting in the online menu. If Enable is confirmed, change the CPU program mode with RUN. If the mode is changed with RUN, the data sharing begins immediately and the communication starts.

6.4 Program Examples

6.4.1 GLOFA-GM Series

Program Example 1: Communication between Dnet modules of LGIS and other maker

This is the program that the master communication module (station 0) is installed in GM6 base slot '0' and sends/receives the data to the remote module (station 1~4) respectively. (please refer to I/O configuration map).

System configuration

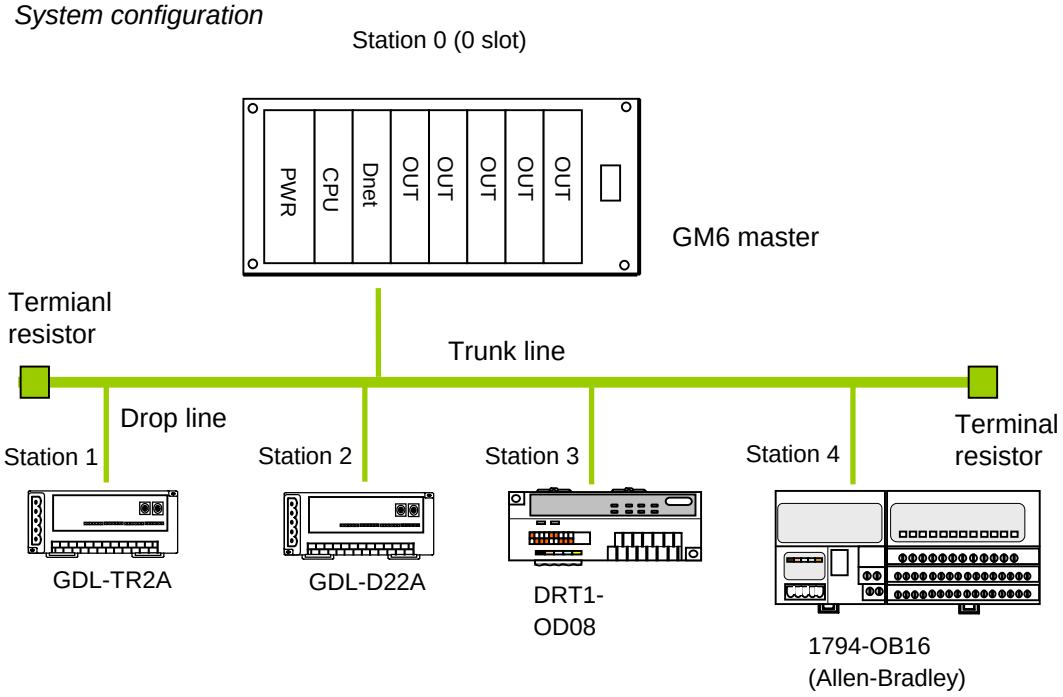

I/O configuration map

Send/receive structure		Area to read	Storage area	Size (byte)
GM6 (Station 0) (Master)	Sending: GDL-TR2A (station 1)	%MW0	-	2
	Receiving: GDL-D22A (station 2)	-	%QW0.1.0	2
	Sending: DRT1-OD08 (station 3)	%MW100	-	1
	Sending: 1794-OB16 (station 4)	%MW200	-	4

1) *High Speed Link* parameter setting in GM6 (station 0)

Master module 'link information' setting

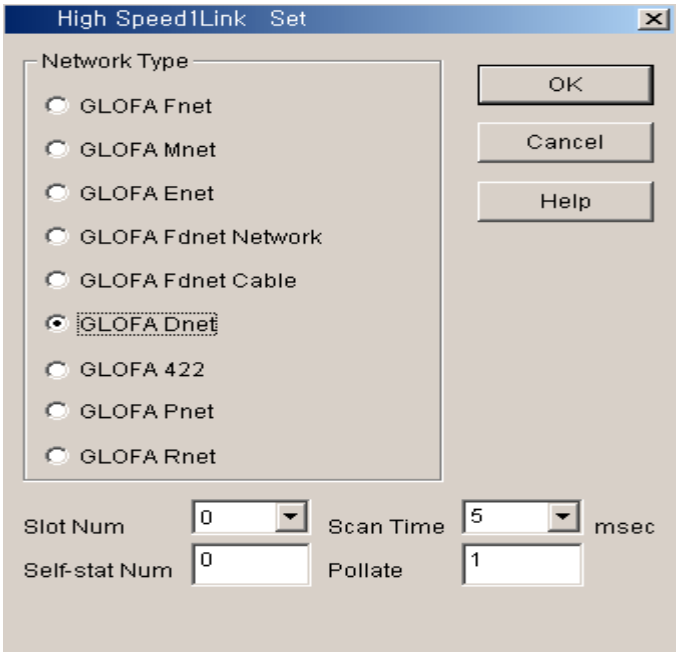

The sending parameter setting to Station 1(GDL-TR2A)

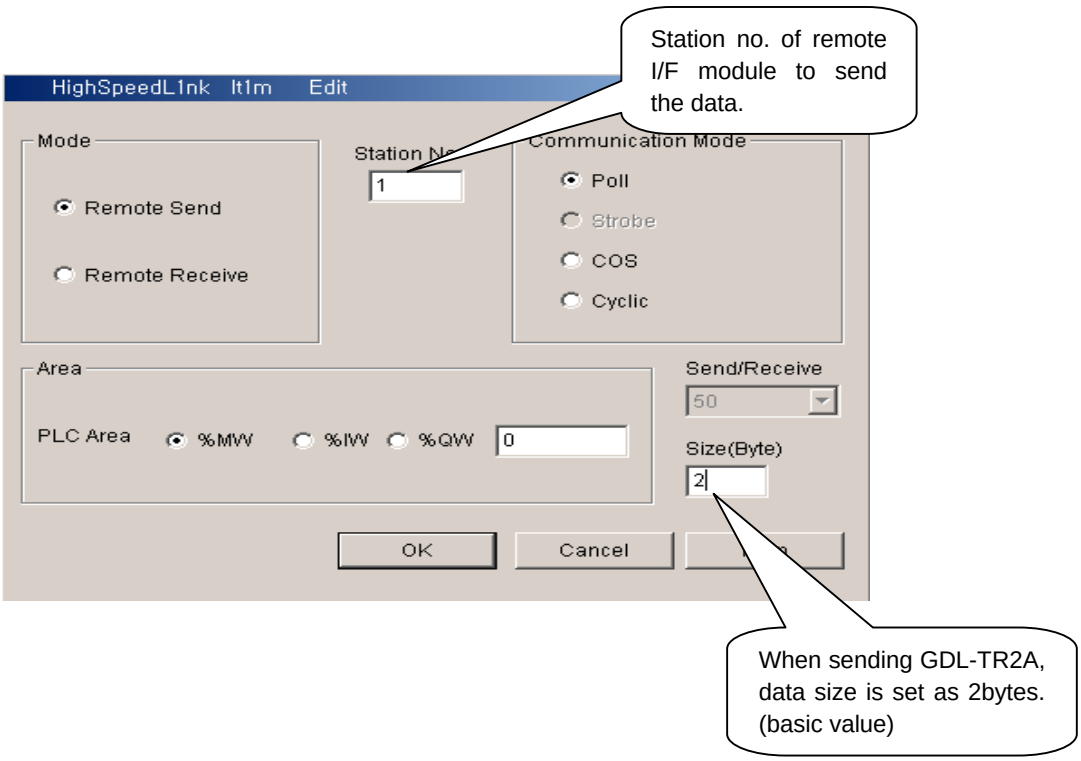

The receiving parameter setting from station 2(GDL-D22A)

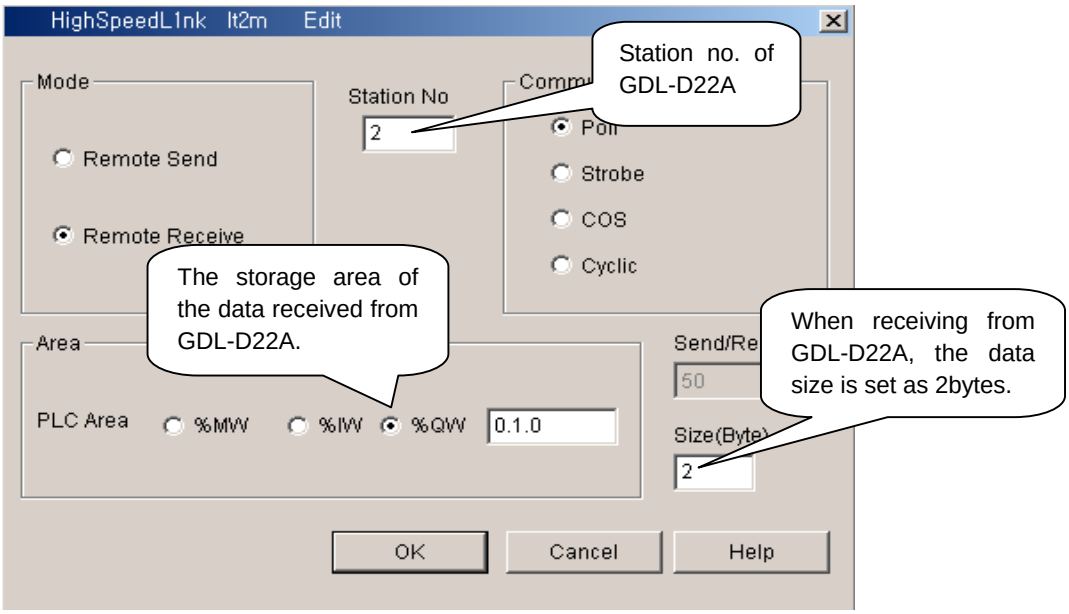

The sending parameter setting to station 3(DRT1-OD08)

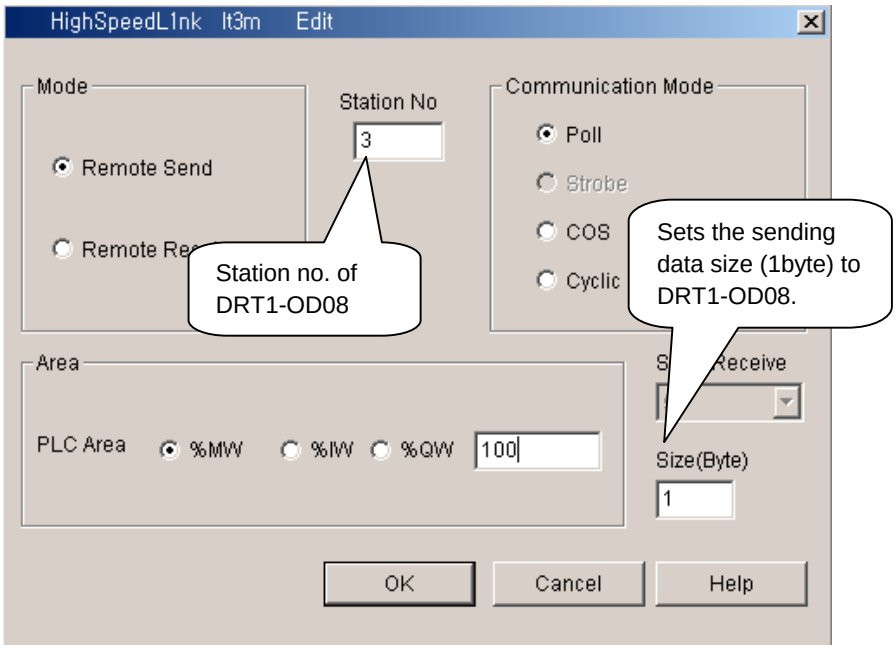

The sending parameter setting to station 4(1794-OB16)

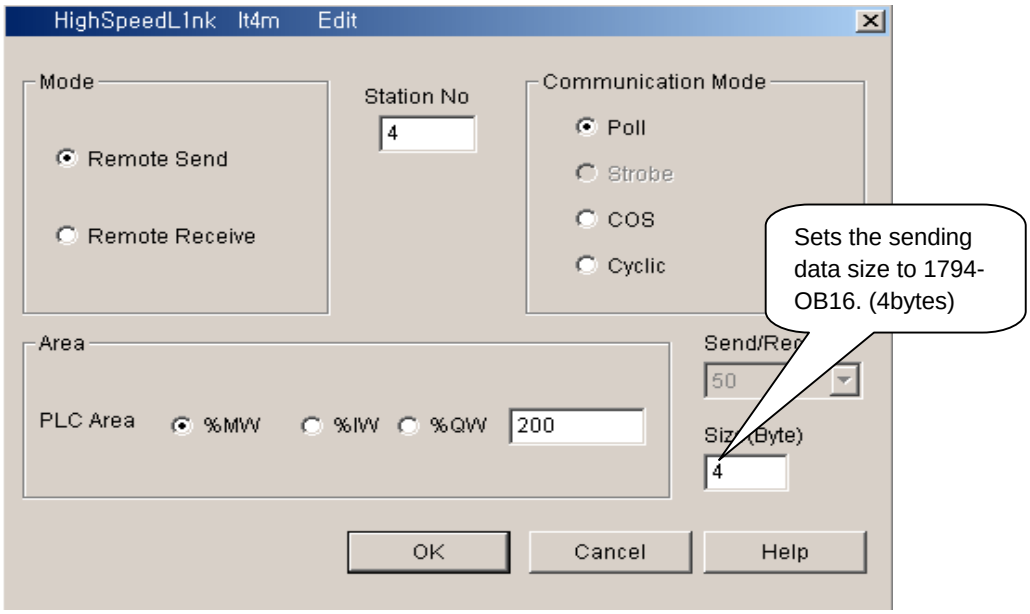

Master module 'High Speed Link 1' setting completion screen

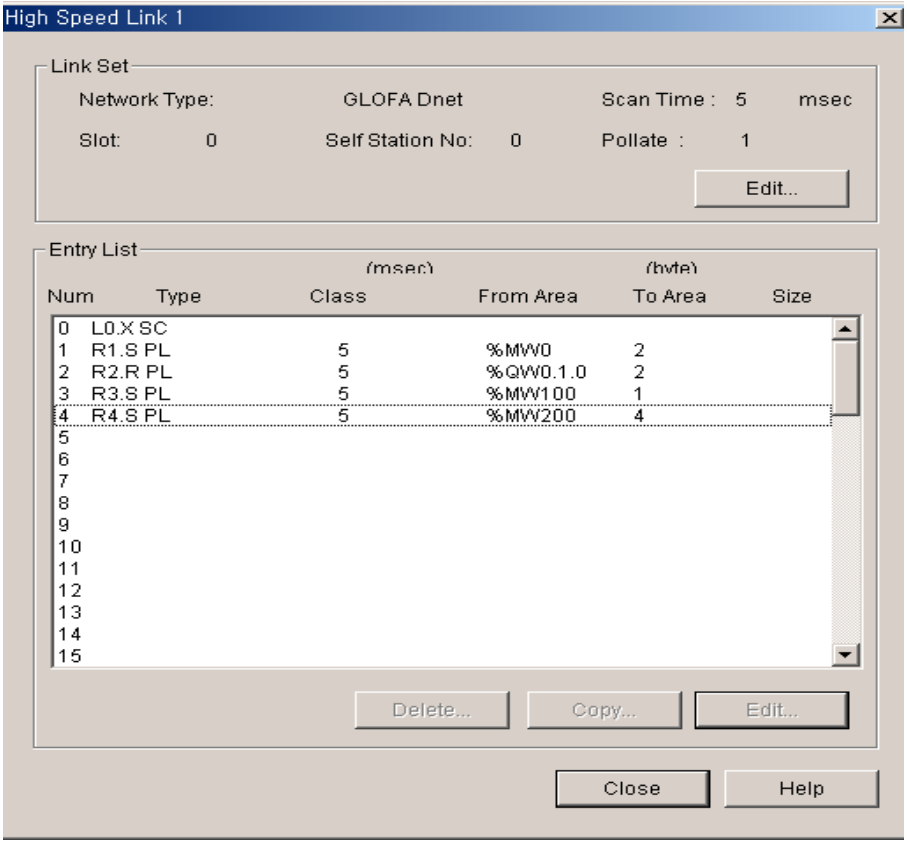

6.4.2 MASTER-K Series

Program Example - The communication between Dnet modules of LGIS

This is the program that the master communication module (station 0) is installed in K300S base slot 0 and sends/receives the data to the remote module (station 1~4) respectively. (please refer to I/O configuration map).

System Configuration

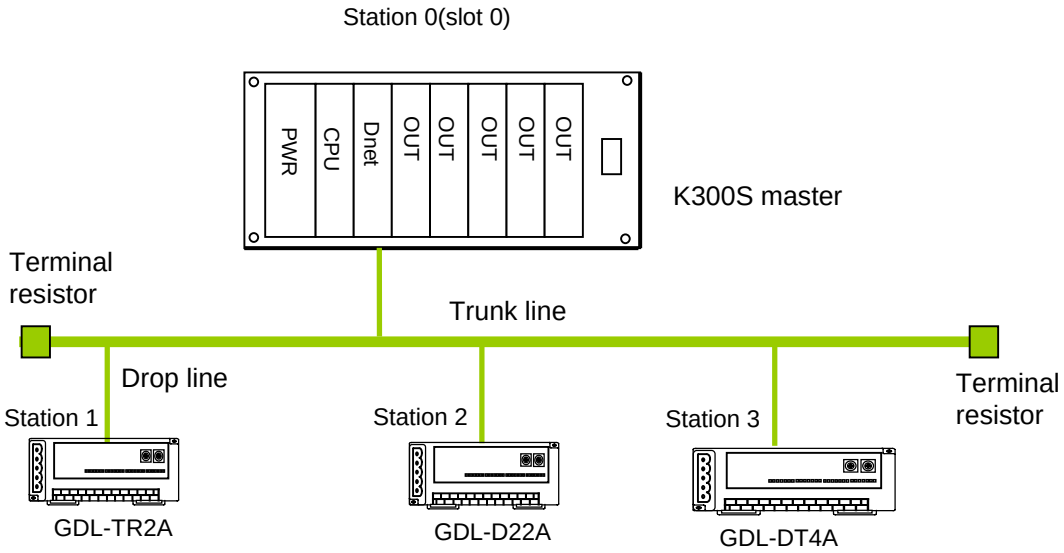

I/O configuration map

Send/receive structure		Area to read	Storage area	Size (byte)
K300S (Station 0) (Master)	Sending: GDL-TR2A (station 1)	P007	-	2
	Receiving: GDL-D22A (station 2)	-	P000	2
	Sending/receiving: GDL-DT4A (station 3)	P007		2
			P001	2

1) *High Speed Link* parameter setting in K300S (station 0)

To make Station 0,1,2 to change the data as specified on the table in the master configuration system, the user should write the user program first and then prepare the data sending/receiving map as shown on the table. And to send/receive the data as shown on the table, it is required to write *High Speed Link* parameter and download it in PLC and *High Speed Link* start shall be carried out according to the following order.

1) Station number allocation and communication cable connection
2) The user program writing (per station)
3) Makes the data sending/receiving map
4) Parameter setting in KGLWIN *High Speed Link* parameter setting item
5) Program and parameter download execution in the online menu.
6) Changing the mode to RUN in the online menu.
7) *High Speed Link* status checking through flag monitor
8) If the error occurs, repeat the above from 1).

High Speed Link parameter for the system of Example Program shall be set as follows.

KGLWIN parameter basic screen (in case of K300S)

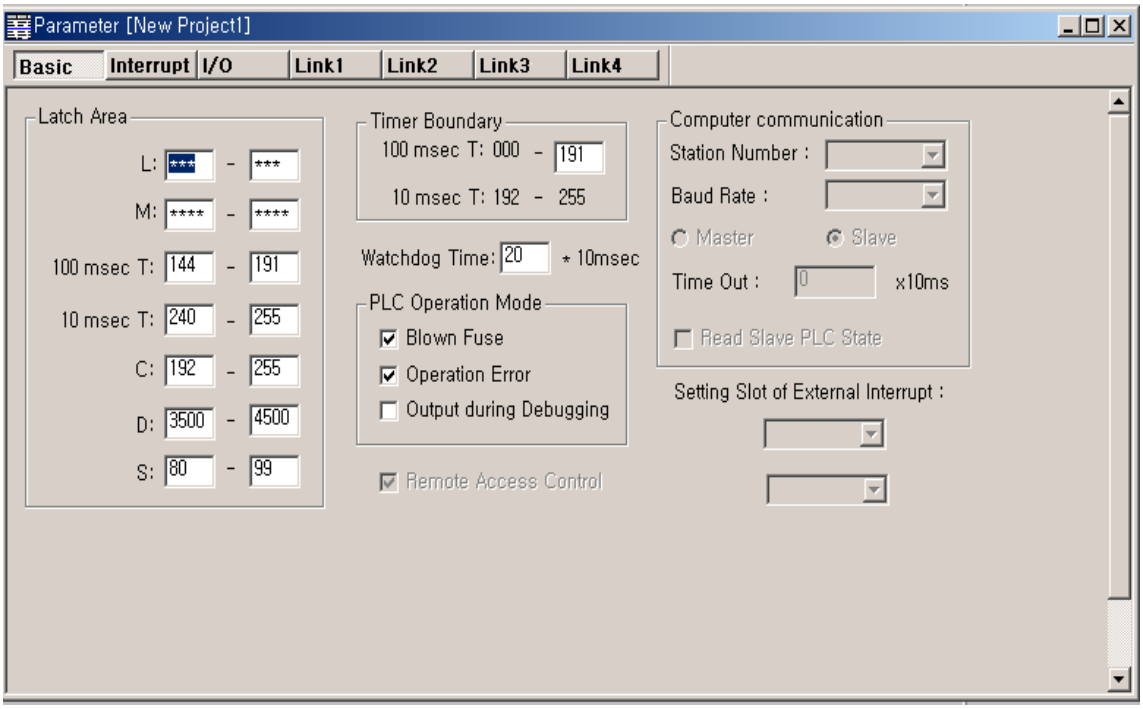

Master module 'link information' setting

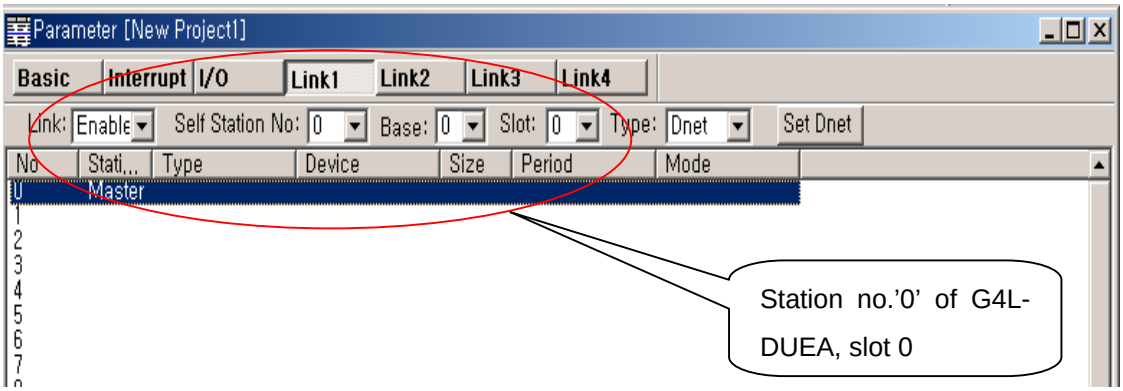

The sending parameter setting to station 1(GDL-TR2A)

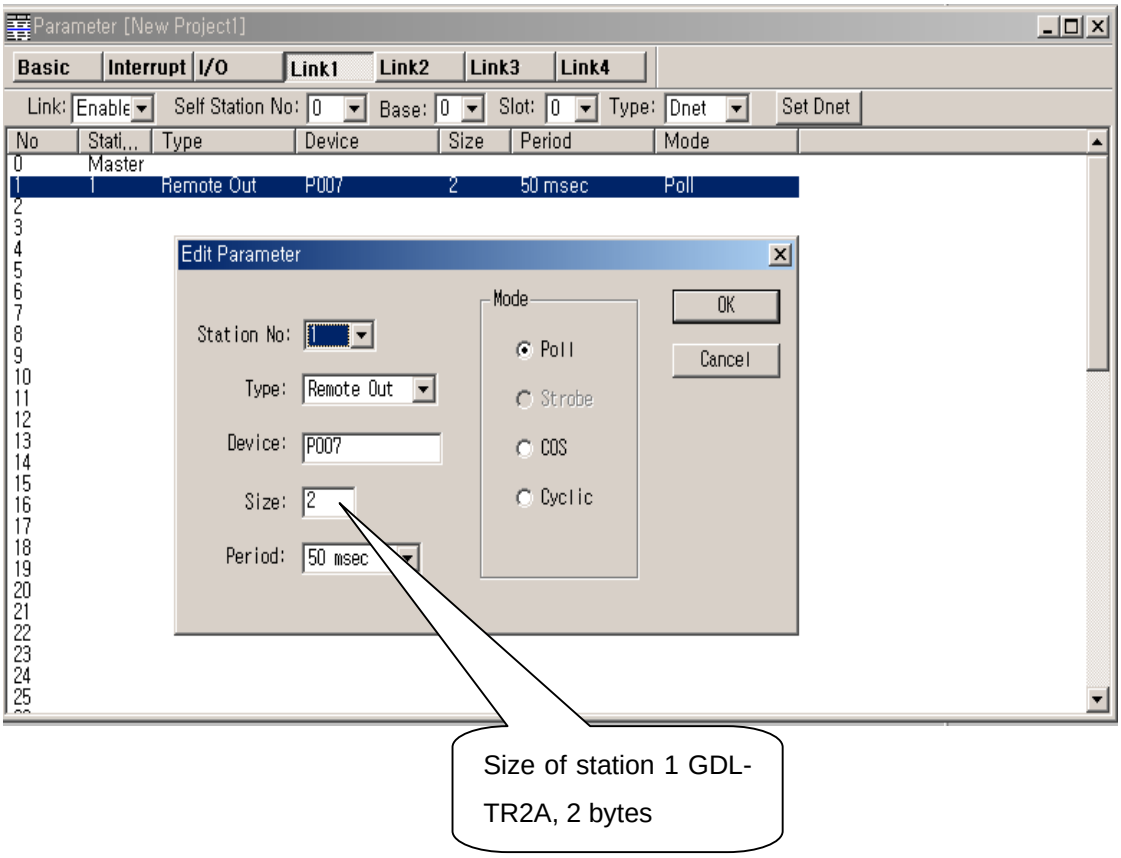

The receiving parameter setting to station 2(GDL-D22A)

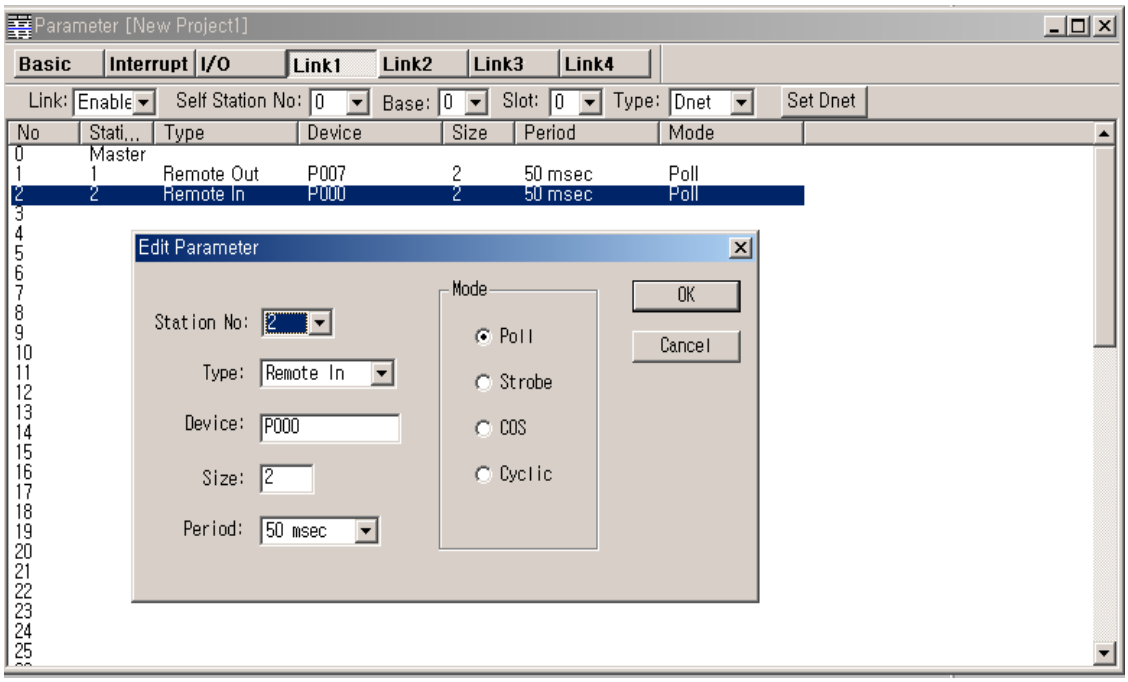

The sending parameter setting to station 3(GDL-DT4A)(combined module)

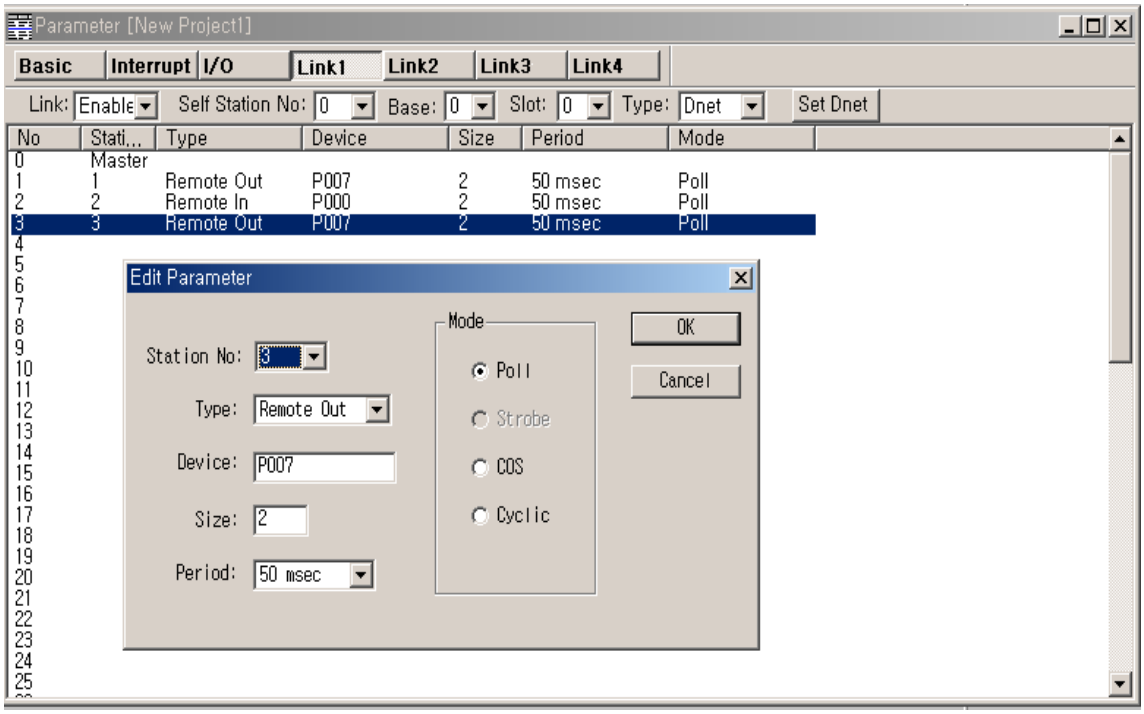

The receiving parameter setting to station 3(GDL-DT4A) (combined module)

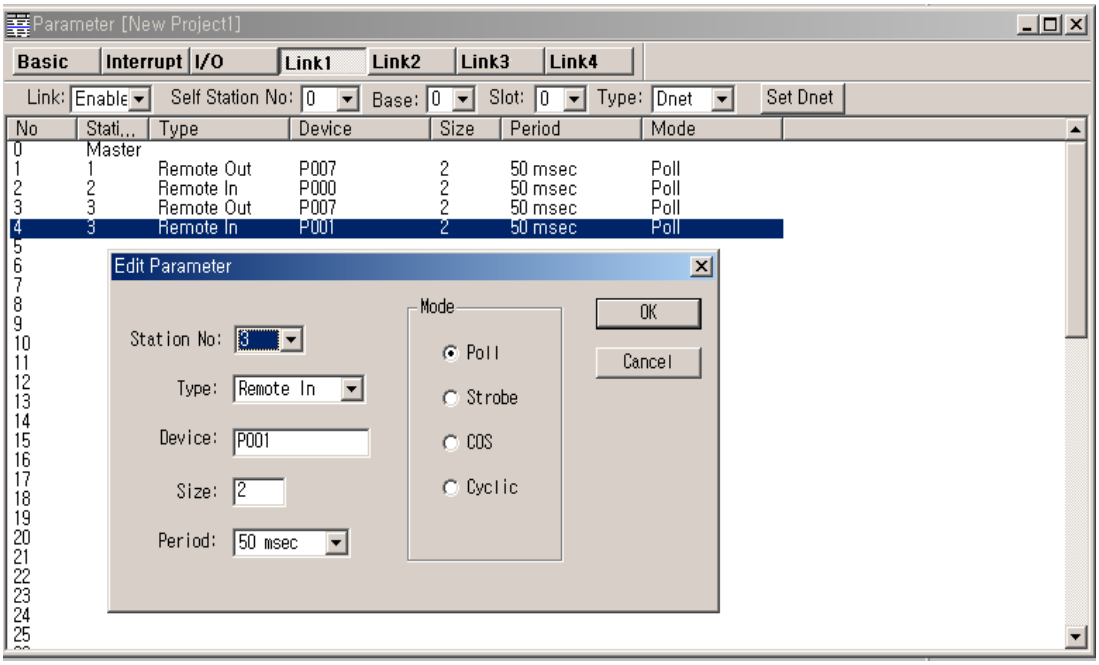

K300S High Speed Link parameter

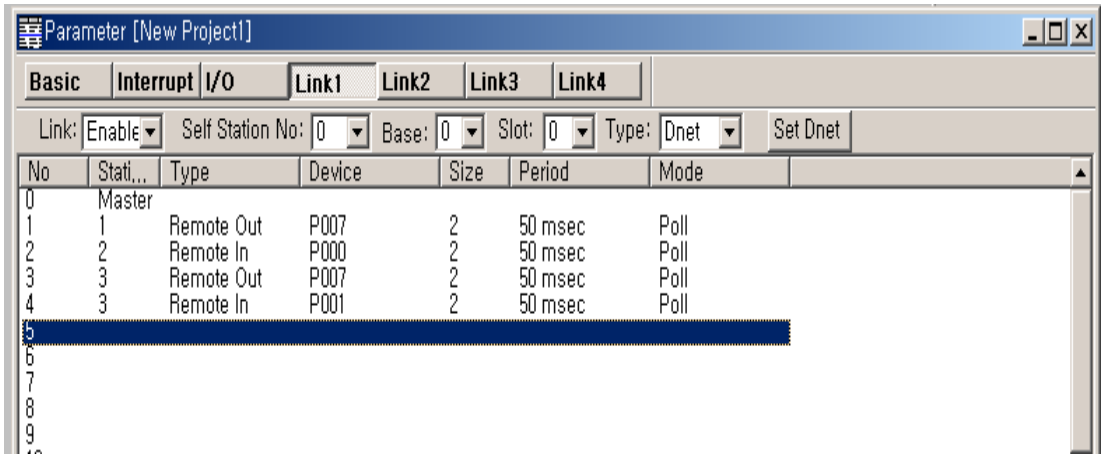

Chapter 7 Rnet Communication

7.1 Overview

The major characteristics of Rnet network are the cost saving of installation/maintenance, diversification of system configuration, easy maintenance and repair, easy system change. This network supports the electrical network (twisted pair cable) that is cost effective and easy to install for the diversification of configuration.

Rnet module can be used in common for GLOFA series and MASTER-K series and applied diversely according to the system application.

In Rnet version V1.0, GLOFA Rnet and MASTER-K Rnet module can be in common.

Type	Rnet V1.0	Remarks
Master (RMM)	G3L-RUEA	GM3/K1000S Rnet (electric)
	G4L-RUEA	GM4/K300S Rnet (electric)
	G6L-RUEA	GM6/K200S Rnet (electric)
	G7L-RUEA	GM7/K80S Rnet (electric)

7.2 Communication Specification

Remote I/O module transmission specification (master standard)

Items		Specification
Transmission speed		1Mbps(Rnet module common)
Encoding method		Manchester Biphase-L
Electric	Transmission distance (per segment)	Max. 750m
	Transmission distance (when using the repeater)	Max. 750m * (6 repeaters + 1) = 5.25km
	Transmission wire	Twisted pair shield cable
Max. no of station number		Master + slave = 64 stations (at least one master should be connected.)
Max. protocol size		256 bytes
Access type of Communication		Circulated Token Passing
Communication method		Connection Oriented service Connectionless service
Frame error check		CRC 16 = $X^{15} + X^{14} + X^{13} + ... + X^2 + X + 1$

7.3 Communication Parameter Setting

7.3.1 Overview

The method to program in RNET communication module is supposed to enable to communicate with Smart I/O module through *High Speed Link* service as mentioned on Chapter 4 'Communication Programming'.

High Speed Link

The *High Speed Link* service through Rnet communication module is available to use all the existing function and carry out the communication by simple parameter setting. The parameter shall be set in GMWIN for GLOFA series and in KGLWIN for MASTER-K and from RNET version V1.0, min. communication period can be set every scan.

1) Setting available range of Rnet communication module

max. High Speed Link point per communication model(Rnet master standard)

Classification		Max. communi-cation point	Max. sending point	Max. block no.	Max. point per block
RNET Communi cation module	G3L-RUEA	3,840 words	1,920 words	64 (0-63)	60 words
	G4L-RUEA	3,840 words	1,920 words	64 (0-63)	60 words
	G6L-RUEA	3,840 words	1,920 words	64 (0-63)	60 words
	G7L-RUEA	3,840 words	1,920 words	64 (0-63)	60 words

Communication setting when communicating with Smart I/O module

HS link block setting		Sending/ Receiving period	Address area		HS link information
Sending	Receiving		GLOFA-GM	MASTER-K	
32	32	20ms ~ 10s	%QW, %IW	P area	Ref.7.3.2

Remark

1) In case of Smart I/O, if 32 points are installed for one module, max. link point is available to use up to 2,016 words for 63 stations.
2) For further information, please refer to 'Chapter 4. Communication Programming'.

7.3.2 *High Speed Link* Communication Status Flag

1) *High Speed Link* information function

It is available to confirm the reliability of data sent/received to/from other station (remote station) through *High Speed Link* and the user can utilize the above information by combining with *High Speed Link* sending/receiving data as keyword type when writing the program in case of emergency or maintenance.

High Speed Link Information

Classification	Run-link	Link-trouble LINK_ TROUBLE	Sending/ receiving status TRX_MODE	Action mode DEV_MODE	Error DEV_ERROR	*High Speed Link* status HS_STATE
Information type	Overall information	Overall information	Individual information	Individual information	Individual information	Individual information
Keyword name (□=HS link no. 1,2,3,4)	_HS□RLINK	_HS□LTRBL	_HS□TRX[n] (n=individual parameter no.0~63)	_HS□MOD[n] (n=individual parameter no. 0~63)	_HS□ERR[n] (n=individual parameter no. 0~63)	_HS□STATE[n] (n=individual parameter no. 0~63)
Data type	BIT	BIT	BIT-ARRAY	BIT-ARRAY	BIT-ARRAY	BIT-ARRAY
Monitoring	Available	Available	Available	Available	Available	Available
Program	Available	Available	Available	Available	Available	Available

7.3.3 GMWIN *High Speed Link* Setting

1) GMWIN project and Link parameter

If you select the *High Speed Link* parameter from GMWIN project basic screen, the *High Speed Link* parameter basic screen will appear and you can select the corresponding item.

High Speed Link parameter basic screen

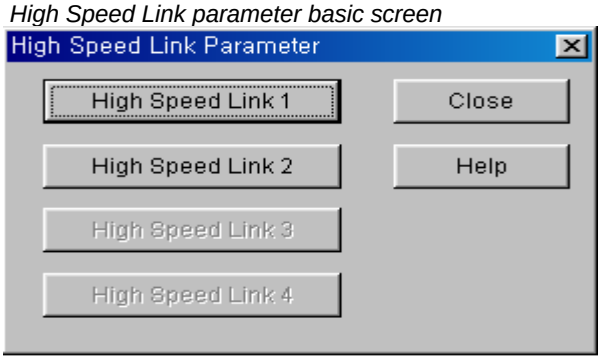

If selecting ‘parameter’-‘*High Speed Link* parameter’ from project screen, the above menu will appear.

High Speed Link parameter basic screen through GM7 master

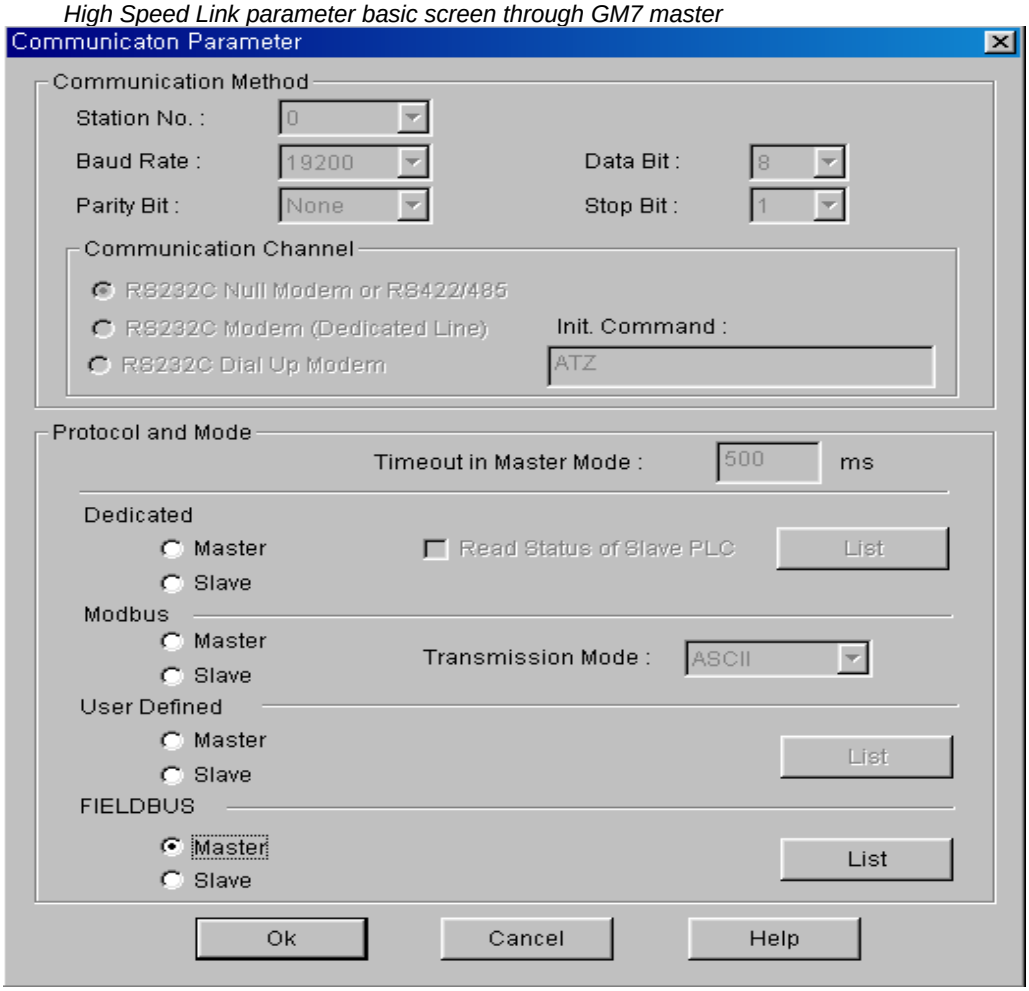

In case of GM7 RNET, select [parameter]-[*High Speed Link* parameter] from project screen.

2) Setting function

The *High Speed Link* items 1~4 means max. installation number of communication module according to PLC CPU type. It is available to install max. 4 communication module for GLOFA GM1/GM2/GM3 CPU/GM4-CPUB, max. 2 for GLOFA GM4-CPUA/GM6 and max. 1 for GM7.

Communication module installation relation per CPU model

Classification	Available communication module	Max. installation number (note 1)
GLOFA-GM3	G3L-RUEA	4 EA
GLOFA-GM4-CPUA	G4L-RUEA	2 EA
GLOFA-GM4-CPUB	G4L-RUEA	4 EA
GLOFA-GM6	G6L-RUEA	2 EA
GLOFA-GM7	G7L-RUEA	1 EA

3) Link parameter setting

If you select the corresponding parameter from parameter setting basic screen, the *High Speed Link* parameter setting first screen will appear as shown in the following figure. If setting the parameter at first, the initial value will be indicated as shown on the figure below.

Parameter setting screen

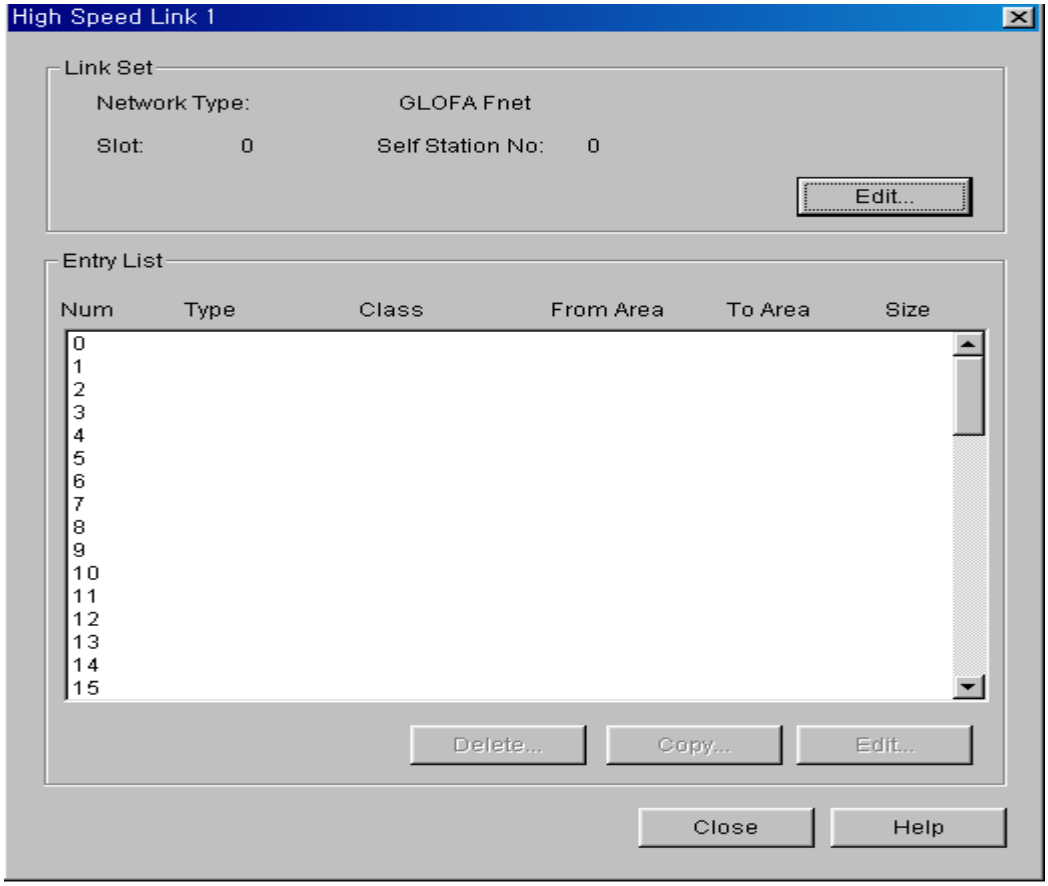

Parameter setting initial screen is composed of two items such as 'link setting' and 'Entry list' and the setting method per each item and its function is as follows.

(1) Link setting

Link setting is the item to set the basic items of communication module to perform the *High Speed Link*.

High Speed Link set screen

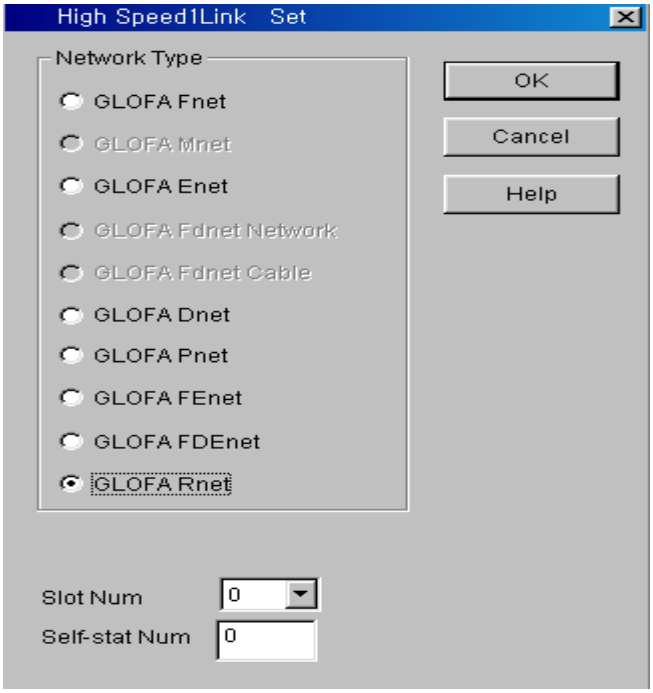

Network type : It sets the installed communication module type and Rnet shall be set.

Slot no. : It sets the position that the communication module to set is installed. (0 ~ 7 slot).

Station no. : Enters the setting self station no. into the station address switch of communication module front side. The self station no. of Rnet shall be set as '0' to use.

(2) G7L-RUEA link setting

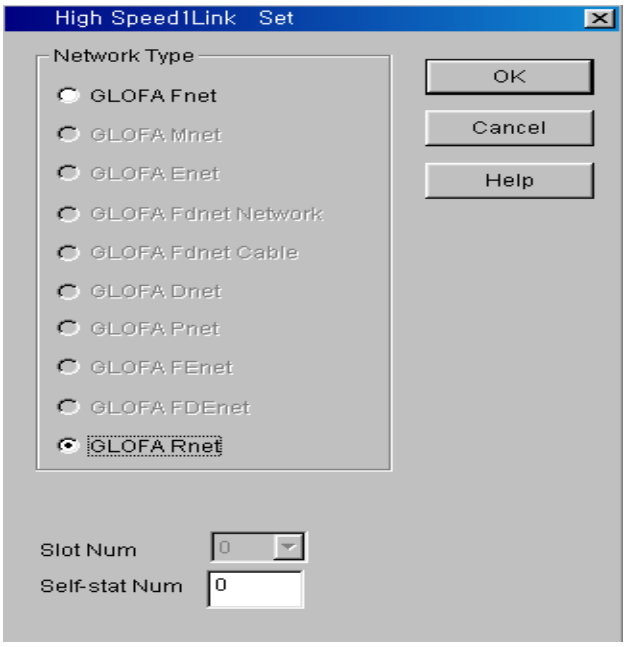

Network type : It sets GLOFA Rnet.
Slot no. : Not-active
Self station no. : The self station no. shall be set as '0' and used.

(3) Entry list setting

Entry list is the area to register the actual data sending/receiving information. For further information, please refer to Chapter 4. 'Communication Programming'.

Remark

GRL-DT4A among Smart I/O module has 'input' and 'output'. Thus, in case of using the Entry list, please be sure that two lists are required for one module. In this case, when sending/receiving, the station no. shall be set same but the block no. differently.

4) *High Speed Link* operation

After setting the *High Speed Link* parameter and executing 'make' from GMWIN compile menu, if you select 'parameter write' and start the *High Speed Link* service, the *High Speed Link* service by the parameter setting begins to run. The *High Speed Link* start order is as follows.

(1) Parameter write

Parameter download screen

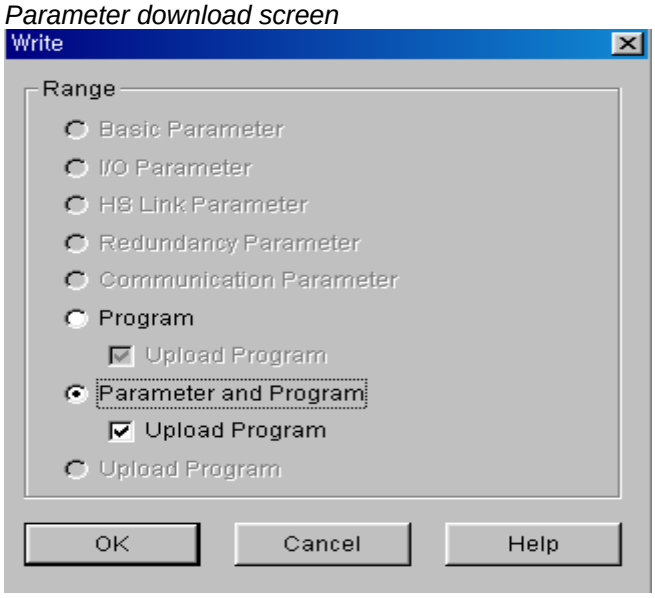

After saving the *High Speed Link* parameter written by the user in the GMWIN project file and connecting with PLC through 'online connect' from GMWIN basic menu, select 'write' and download the *High Speed Link* parameter or 'parameter and program'.

(2) *High Speed Link* start

Link Enable setting

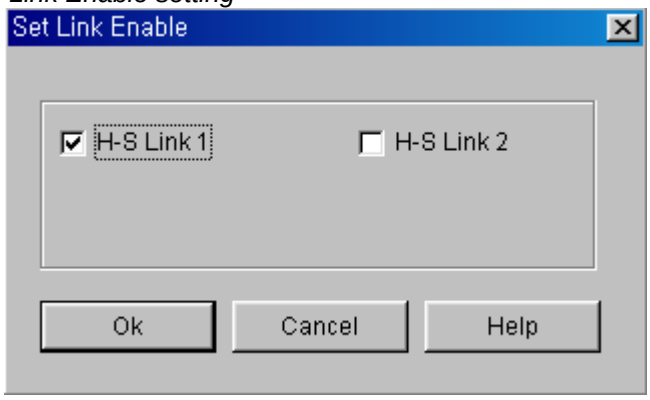

(3) G7L-RUEA *High Speed Link* start

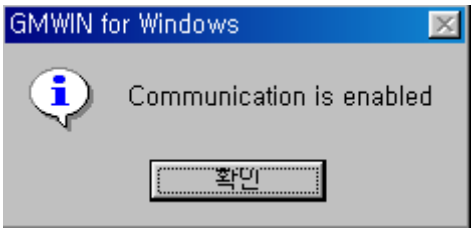

After parameter write, *High Speed Link* is executed after setting the 'Link enable'. Link enable setting is available only in the stop mode of PLC. And if the *High Speed Link* enable setting starts, it carries out the *High Speed Link* regardless of PLC action mode and 'parameter' and 'Link enable information' shall be battery backup in the PLC CPU and preserved if the power is cut off.

(4) *High Speed Link* information monitor

It is available to monitor the current *High Speed Link* status by using 'monitor' function after the GMWIN online connection. There are two kinds of methods to monitor : by selecting 'variable monitor' from monitor menu and by high speed parameter monitor.

- Variable monitor

  'Variable monitor' is the function to monitor the necessary items by using the GMWIN flag monitor function and the order to monitor is as follows.

① Select **Variable monitor** from online monitor items.
② Select ⦿**flag** from 'register variable ' screen as shown on the figure.
③ Select the *High Speed Link* information flag you want to monitor directly one by one from **Variable, Flag list** screen and register. (As _HSxSTATE[n], _HSxERR[n], _HSxMOD[n],_HSxTRX[n] is ARRAY flag, the user enters the registration no. of parameter that he wants to monitor directly).

Remark

'x' shows the *High Speed Link* no. and it has the range1~4 for GM1/GM2/GM3/GM4-CPUB PLC, 1~2 for GM4-CPUA,GM6 PLC and only 1 is effective for GM7. [n] is the individual parameter no.(0~63).

If you register the variable from the menu and select 'close', the corresponding monitor screen will appear and the monitoring begins.

High Speed Link information variable register screen

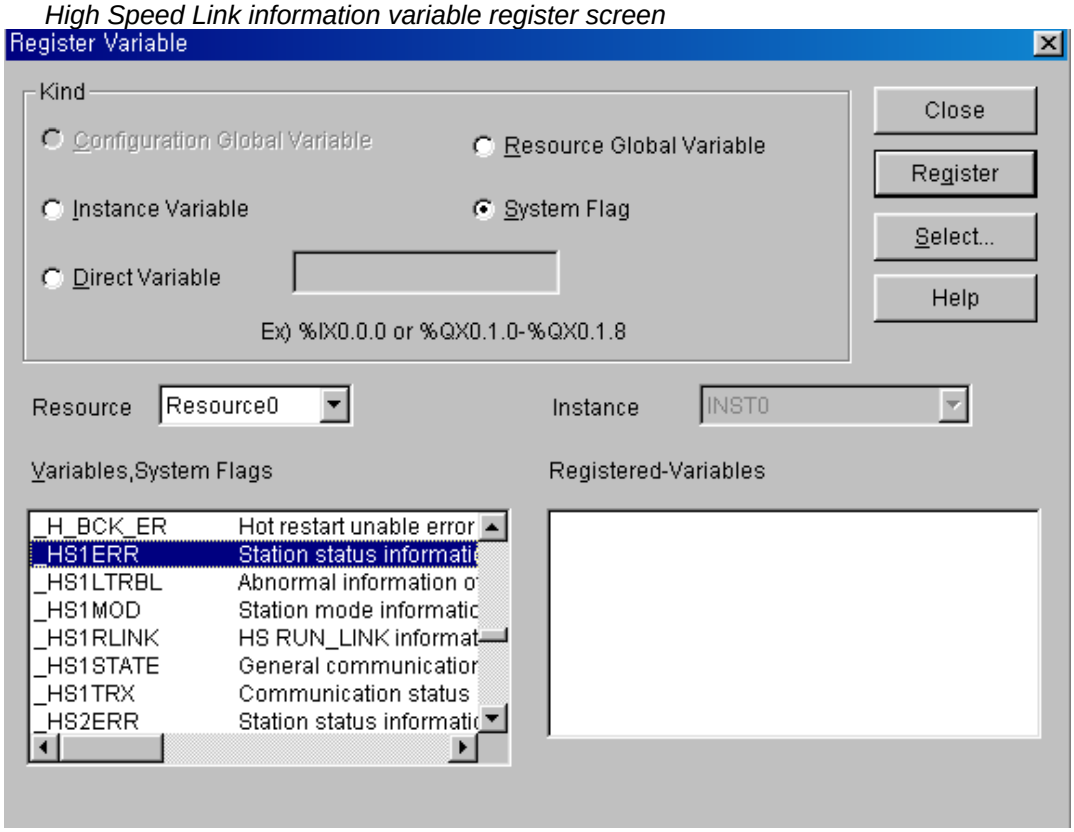

High Speed Link information monitor screen (variable registration)

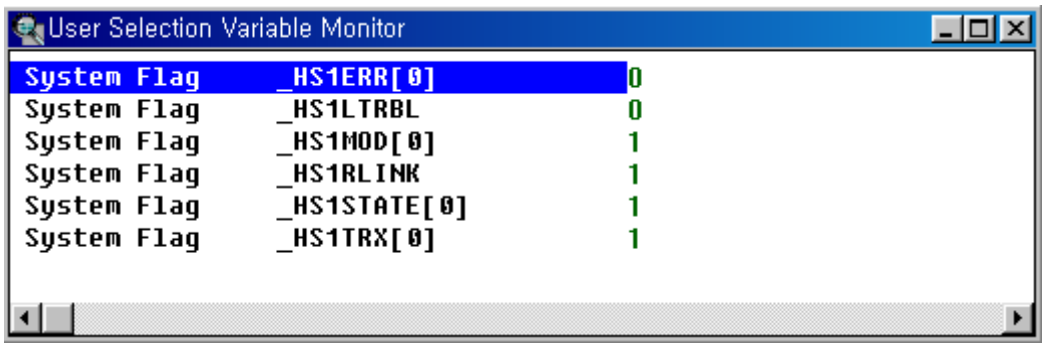

The detailed contents for the corresponding flag is described in 'Communication module flag application' and it is available to carry out the RNET network status diagnosis by the corresponding flag monitor properly.

- High speed parameter monitor

This is the function to monitor the *High Speed Link* communication status from the menu as below. Select 'link parameter' item from monitor menu of GMWIN online connection.

Link parameter selection screen

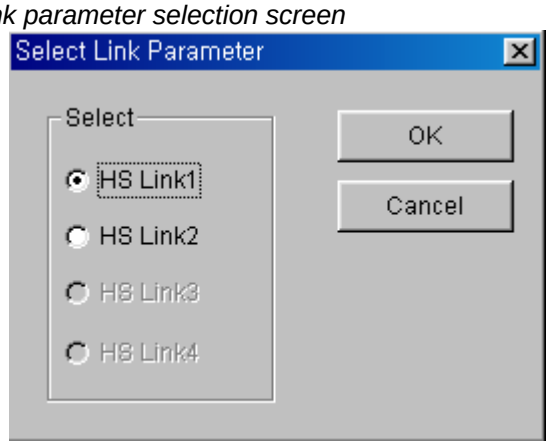

Link parameter monitor shows the general information for RUN-LINK, LINK-TROUBLE on the top screen as below and the individual information such as mode (action mode), communication (sending/receiving status), error on the setting parameter items.

High Speed Link parameter monitor screen (Example)

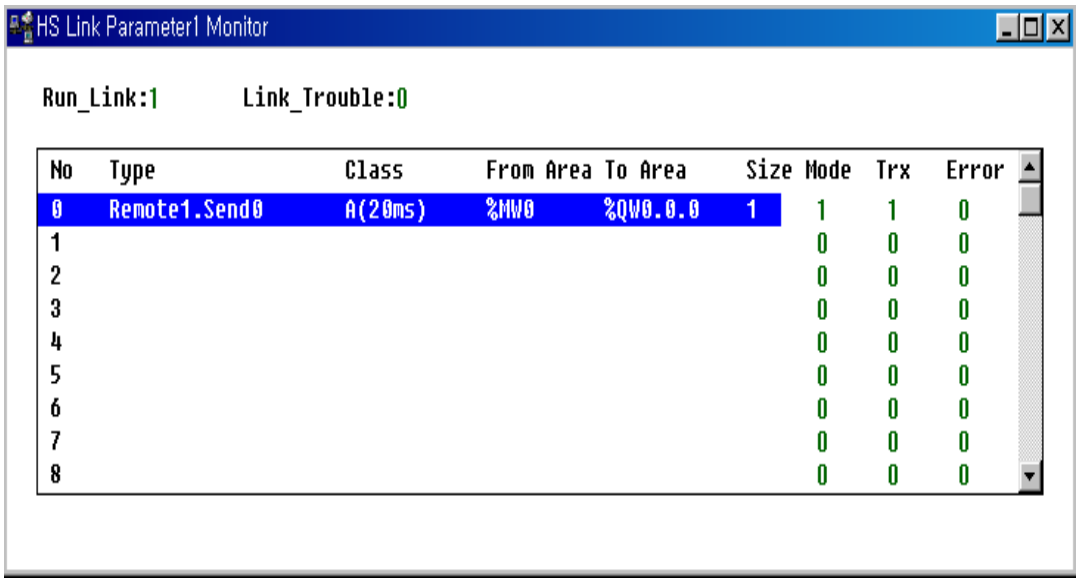

No	Type	Class	From Area	To Area	Size	Mode	Trx	Error
0	Remote1.Send0	A(20ms)	%MW0	%QW0.0.0	1	1	1	0
1						0	0	0
2						0	0	0
3						0	0	0
4						0	0	0
5						0	0	0
6						0	0	0
7						0	0	0
8						0	0	0

For the meaning of the value monitored on the above figure, please refer to ‘Chapter 4. Communication Programming’.

Remark

1) RUN-LINK monitoring
   In case that GRL-TR4A among Smart I/O is set in the parameter, RUN-LINK shall be indicated as ‘0’.

7.3.4 KGLWIN Link Setting

1) KGLWIN project and Link parameter

High Speed Link parameter selects link parameter from KGLWIN project screen and sets the corresponding item. The setting order and the function per item are as follows.

(1) KGLWIN project setting

The following shows parameter basic screen appeared when selecting 'parameter' window.

KGLWIN parameter basic screen (in case of K200S)

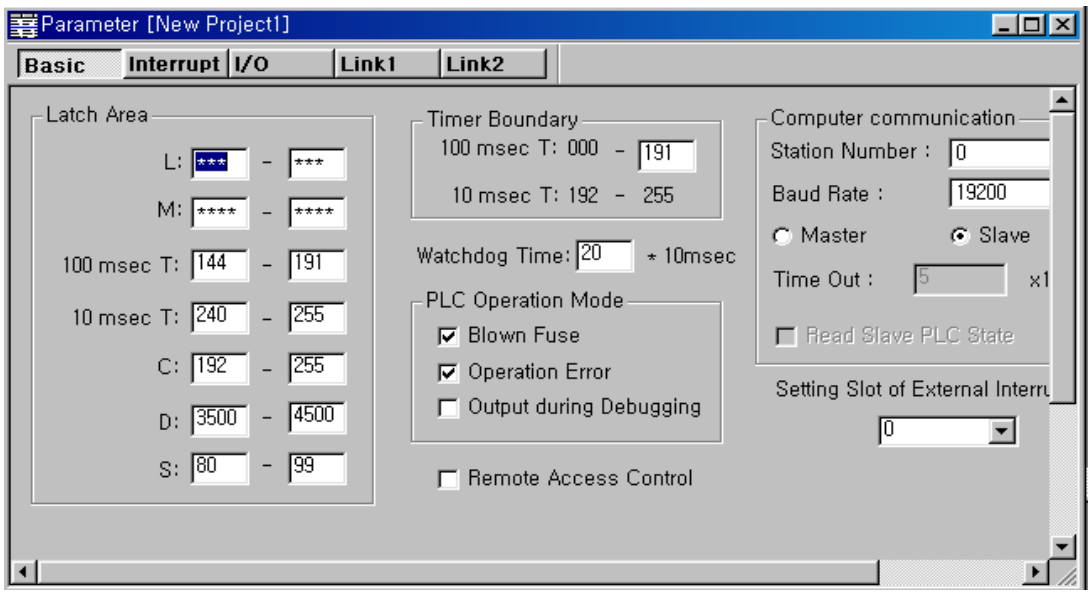

(2) Link parameter basic setting

If you select 'Link 1' from KGLWIN parameter basic screen, the *High Speed Link* 1 parameter basic screen as shown below will appear.

Link parameter basic screen

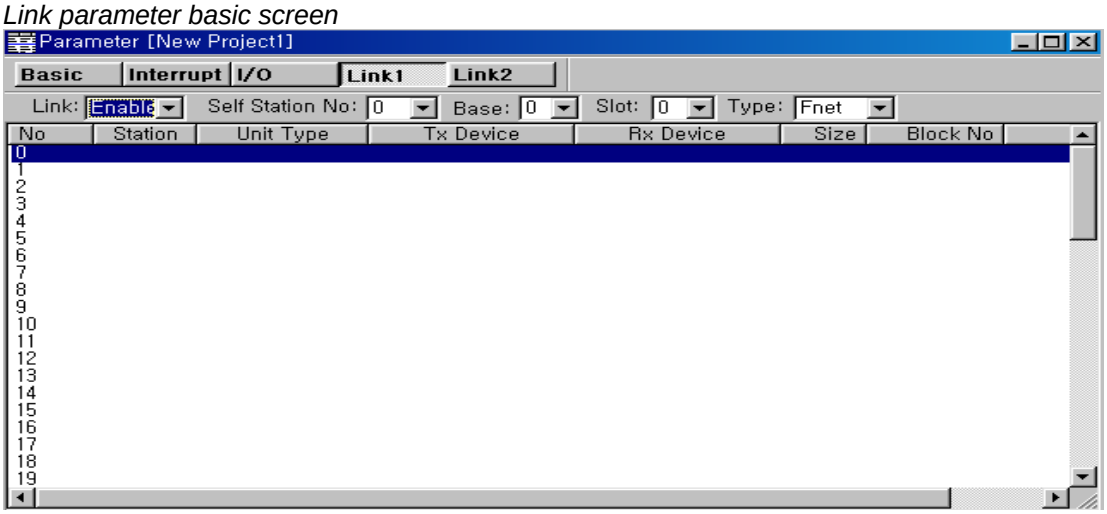

(3) K80S project and Link parameter basic setting

This is parameter basic screen to be appeared when selecting K80S parameter window.

KGLWIN parameter basic screen (in case of K80S)

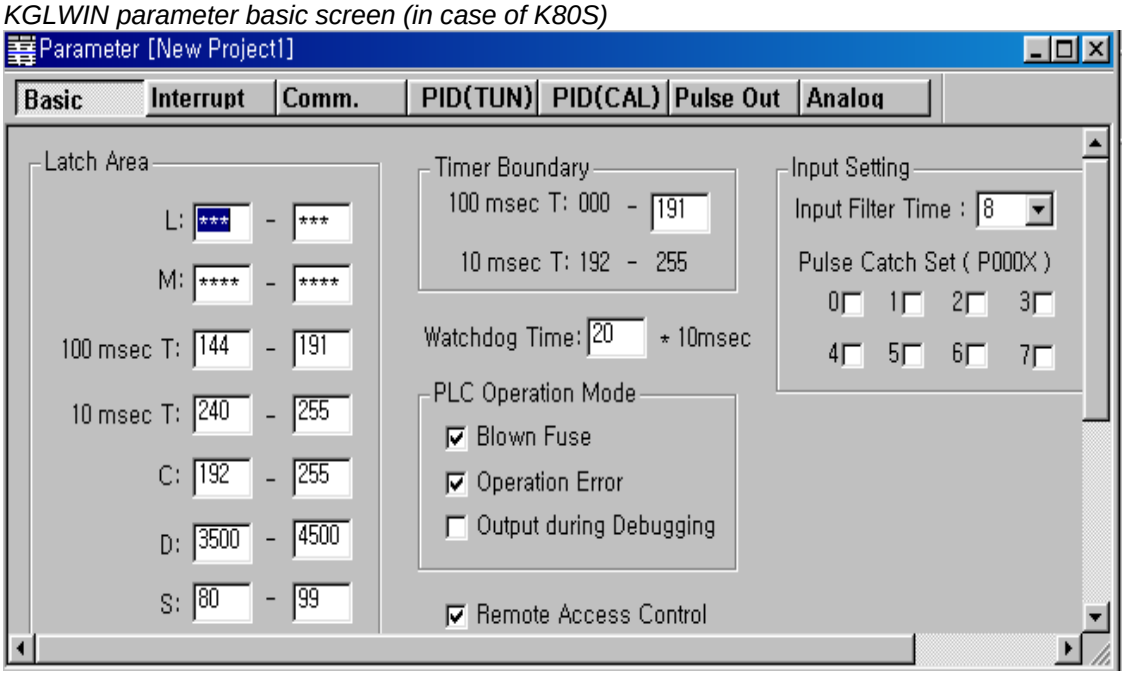

If selecting ‘communication’ from KGLWIN parameter basic screen as shown on the above figure, the communication parameter setting screen will appear as below and if you select ‘master’ from the FIELDBUS menu on the right bottom side and press ‘register list’, the *High Speed Link* parameter basic screen will appear.

Communication parameter setting screen

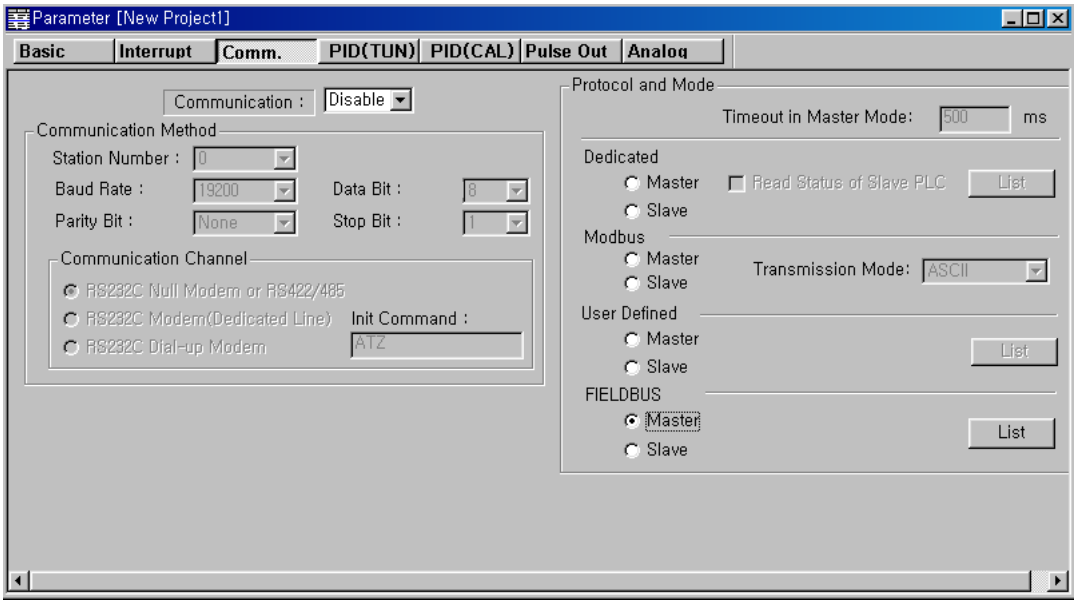

Link parameter basic screen

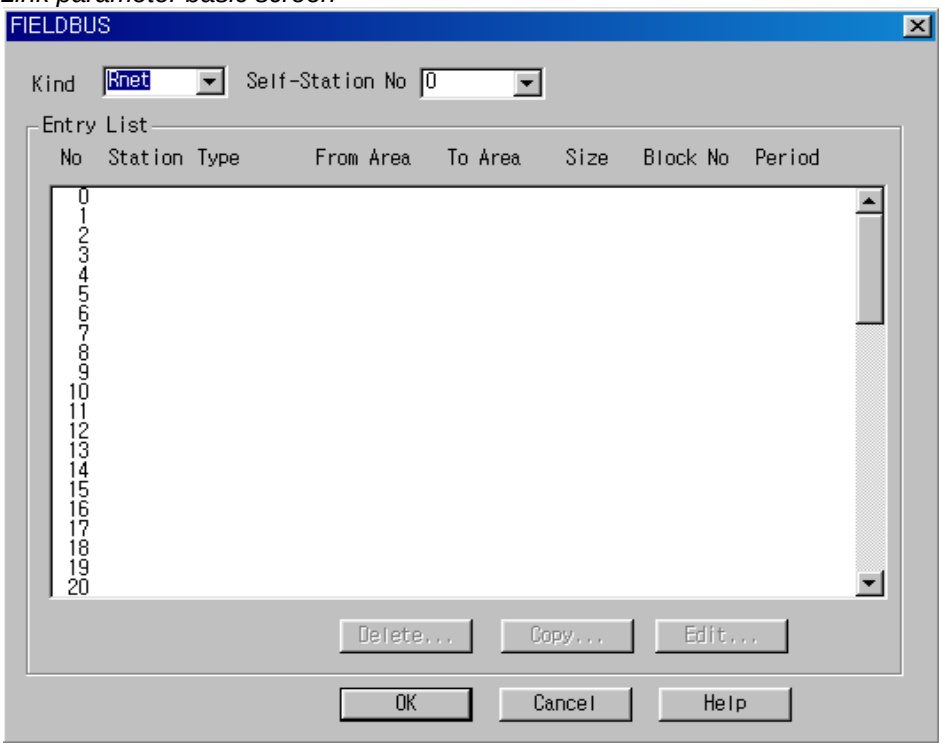

◎ **Link1** : This is one of *High Speed Link* type and max.4 communication modules can be installed for K1000S CPU, max. 2 for K300S/K200S and max.1 for K80S. The *High Speed Link* no. is not related to the installed slot no. and only one *High Speed Link* parameter is available to set for one communication module. The table below shows the installation available communication module per CPU model and max. installation amount.

Relation of communication module installation per CPU model

Classification	Communication module	Max. installation amount	Remarks
K1000S	G3L-RUEA	4 EA	Each communication module can be installed by combining each other.
K300S (below v2.2)	G4L-RUEA	2 EA	
K300S (more than v2.2)	G4L-RUEA	4 EA	
K200S	G6L-RUEA	2 EA	
K80S	G7L-RUEA	1 EA	

◎ **Link** : It sets whether or not to execute the link of communication module. (Enable, Prohibit)

◎ **Self station no.** : Self station no. should be set as ‘0’ and used.

◎ **Slot** : This is the communication module installed slot no. and it is set by selecting one from ‘0’~‘7’.

◎ **Registration no.** : This is the serial no. to indicate the registered order of the

individual parameter and it is set by ‘0’ ~‘63’. It is available to register up to total 63 and not related to the sending/ receiving order. But it is available to register max. 32 for sending and 32 for receiving respectively.

(4) Link parameter detail setting

If you doubleclick in the status that the *High Speed Link* registration no.1 is selected, the link parameter setting screen will appear as shown on the figure below.

Link parameter modification screen (in case of the HS link registration no.0)

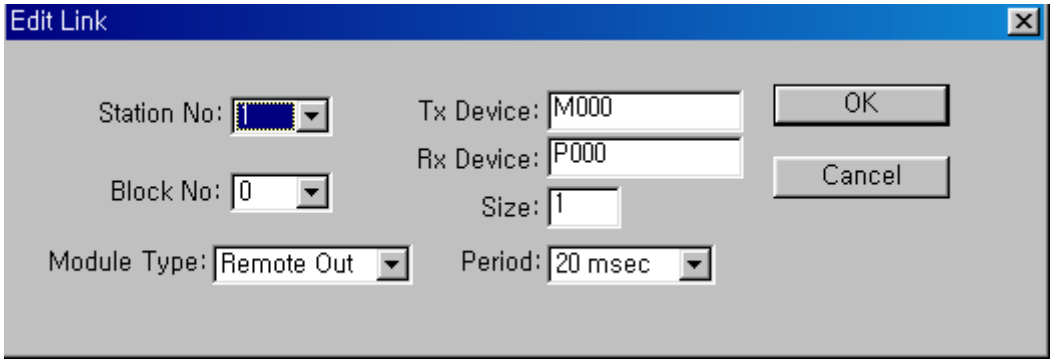

◎ **Station no.** : If sending/receiving the data of the setting item, it is required to set other station no. The following table shows the method to set the station no.

Station no. setting method

Communication type	Station no.	Range of station no.
Remote sending	Station no. of other station (remote)	1~63
Remote receiving		

◎ **Block No.** : This is the parameter to send/receive lots of data of various areas from one station and distinguish the data of various blocks each other. If setting 32 stations for Smart I/O output module, the input should be set as 31 stations and if setting 32 stations for input. The output should be set as 31 stations because this supports up to 64 stations including master station. In this case, if setting more than 2 same block no. for the same station no., the network will be down. Thus it is not available to set more than 2 block for the same station. The max. number of connection station is 64 stations including the master station but if the sending/receiving is set for the one station at the same time, it is not available to set max. station setting.

◎ **Communication type** : It is set by remote sending and remote receiving.
Remote sending : when sending the data of self station to remote station.
Remote receiving : when receiving the data of remote station to self station.

◎ **Sending/Receiving device** : This means the area of sending/receiving. In case of remote sending that means the sending to remote station, set the sending area of self station for the sending device and the receiving area (P area) of remote station for the receiving device. As the remote receiving means the receiving from remote station, set the sending area (P area) of remote station for the sending device and the receiving area of self station for the receiving device.

Sending/Receiving device setting area per communication type

Communication type	Device	Setting available area	Remarks
Remote sending	Sending	P,M,L,K,F,D,T,C all area	Sending area of self station
	Receiving	P area	Receiving area of remote station
Remote receiving	Sending	P area	Sending area of remote station
	Receiving	P,M,L,K,D,T,C area	Receiving area of self station

◎ **Size** : This means the size of sending/receiving data and the unit is 1 word (16 points). It is available to set max. 60words but for Rnet, it is set as 2 words at the present time because max. points of the current Smart I/O is 2words (32 points).

◎ **Communication period** : *High Speed Link* is the service to carry out the sending/receiving by the parameter set by the user at the point that PLC program ends. Thus, when PLC program scan time is short within several ms, communication module begins to transmit the data according to every program scan which results in increasing the communication amount and reducing the effectiveness of overall communication system. Thus, to prevent this, the user can set the sending/receiving period from min.20ms (RNET version V1.0 : from every scan) to max. 10sec. The sending/receiving period means the sending period if the corresponding block is set as ‘sending’ and the period to check the data receiving of the corresponding block if it is set as ‘receiving’.

(5) *High Speed Link* operation

After completing the *High Speed Link* parameter setting, if you click the ‘verify’ button from download menu and execute the parameter download, the *High Speed Link* service begins. In this case, the corresponding link of the link parameter basic screen should be Enable status.

Parameter download screen

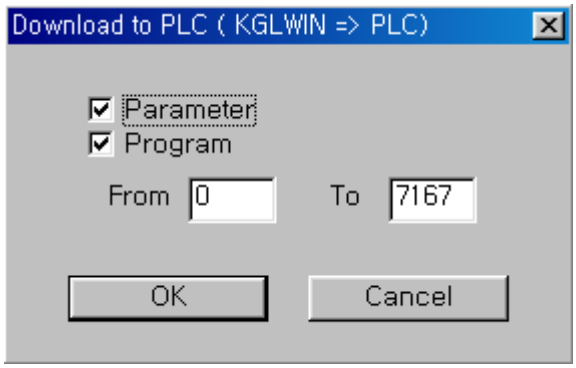

2) *High Speed Link* information monitor

After KGLWIN online connection, it is available to monitor *High Speed Link* information by using monitoring window and 'information read' window. There are two kinds of method to monitor : one is by selecting the flag to monitor from flag monitor menu of monitoring window to monitor the individual information and overall information and another one is by selecting the *High Speed Link* parameter from online-information read menu to monitor overall information.

- Flag monitor

  Flag monitor is the function to monitor by selecting the necessary flag from KGLWIN [project]→[monitoring] using the flag monitor menu. First, if you select flag monitor button from monitoring window, the flag monitor screen as shown on the figure below will appear and if you press the registration button (▼), the flag registration screen will appear. Select the *High Speed Link* information flag to monitor from the flag registration screen one by one and register it. If flag registration is completed, it begins to monitor in 'monitor' screen. If the monitoring does not work, please check the monitor start mode once again.

Flag monitor screen and Flag registration screen

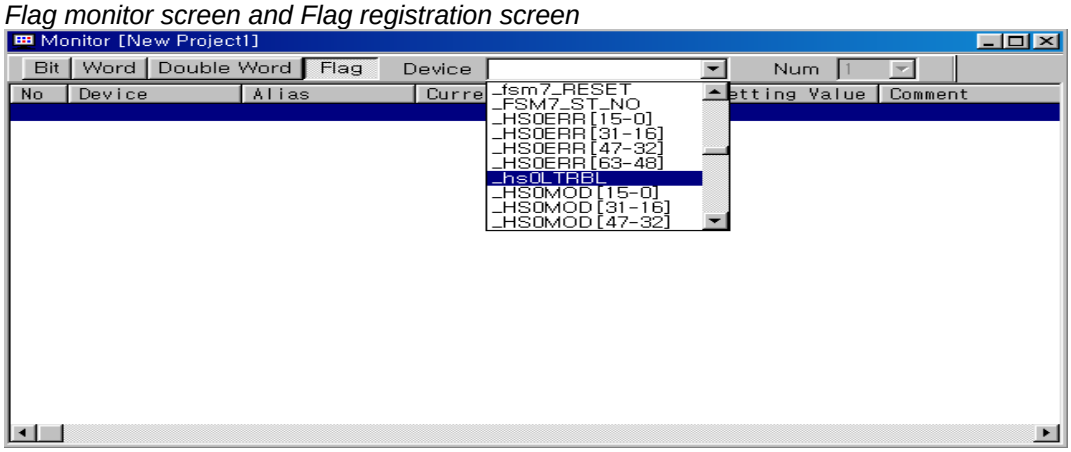

Flag monitor screen (the flag is registered.)

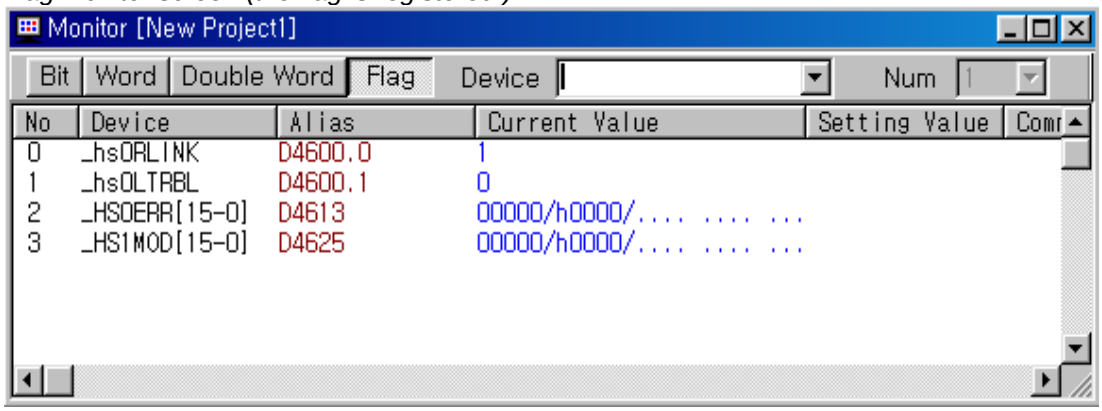

● Reading information in *High Speed Link* parameter monitor

If you select the *High Speed Link* parameter from the menu 'online-information read', you can see the detailed information for the *High Speed Link* parameter as shown on the above figure.

High Speed Link parameter monitor

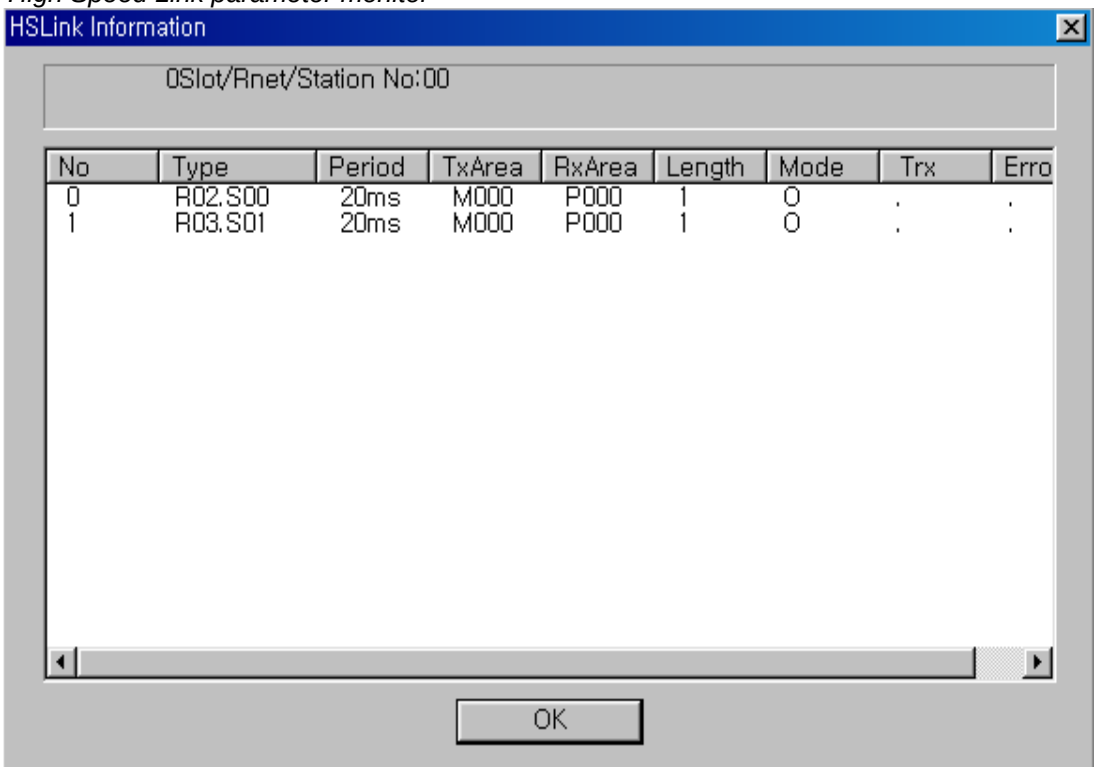

R02.R03 from the type item means Remote station (Smart I/0) 2 and 3 and SOO,S01 means the block no., and this is the parameter to transmit the data of self station (M000) to Remote (Smart I/O) station 2 (P000) through block no.'0'. R03 is also the parameter to transmit the data of self station (M000) to Remote (Smart I/O) station 3 (P000) through block no.1.

● Link information monitor from information Read

If you select the menu ‘online’-‘information read’-‘link information’, it is available to monitor the link status of the communication module installed per slot easily.

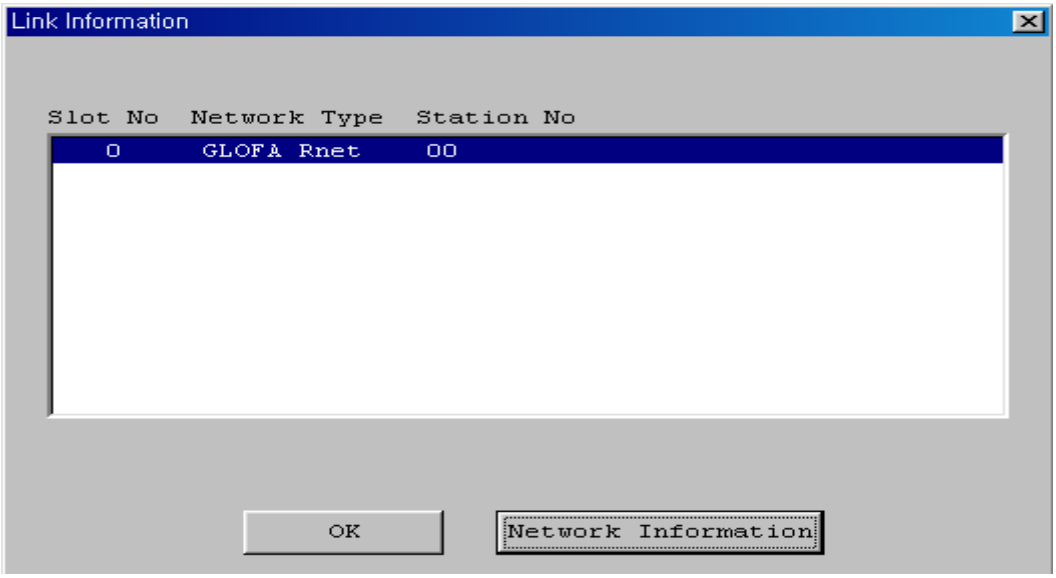

If you select the module to monitor and click the verify button, you can see the connection status of all RNET network connected to the corresponding module. **(except K80S)**

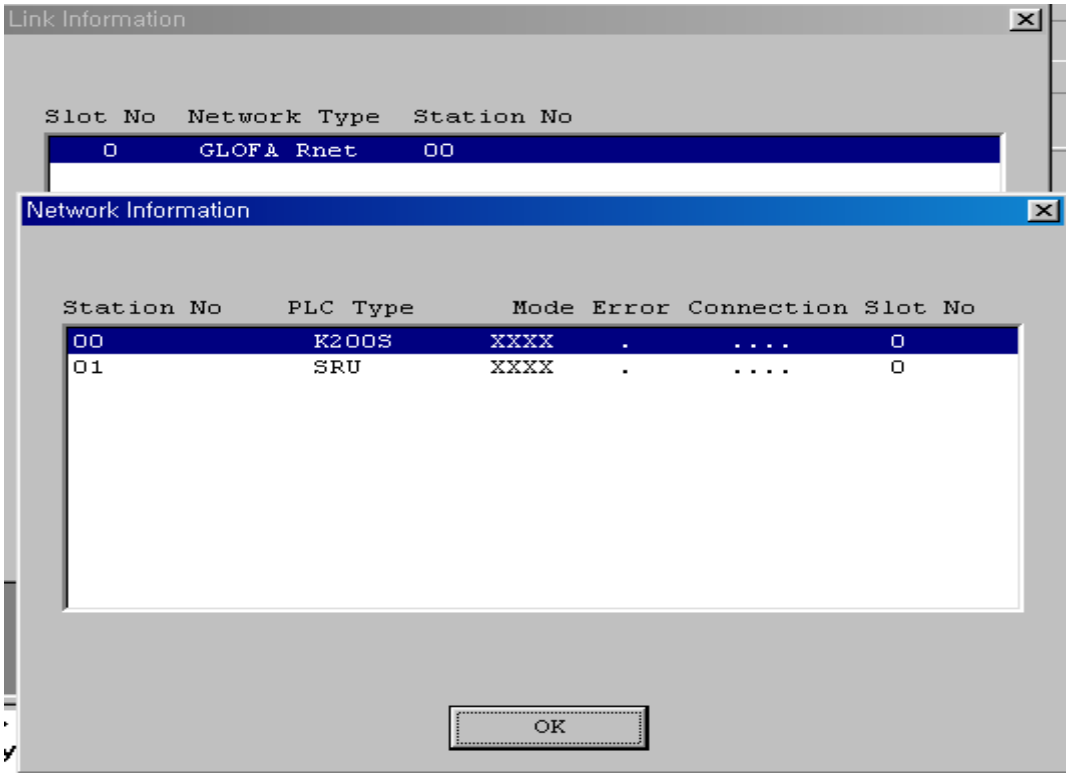

3) Flag

L area list when using the data link module (in case that installed in Slot no.0)

x : slot no., n : station no. of other station

Keyword	Address no.		Description
_NETx_LIV[n]	L0001~L003F	L0001 ~ L000F (1~15 stations)	This is the flag to inform that the power of other station is normal and the data is sending/receiving normally with other station through communication cable as the Alive information of other station. (Reading only)
		L0010 ~ L001F (16~31 stations)	
		L0020 ~ L002F (32~47 stations)	
		L0030 ~ L003F (48~63 stations)	
		L0050 ~ L005F (16~31 stations)	
		L0060 ~ L006F (32~47 stations)	
		L0070 ~ L007F (48~63 stations)	

High Speed Link detail flag *x : K1000S=9, K300S/K200S=4* *m : HS link no.*

Keyword	Type	Bit position	Items	Description
_HSmRLINK	Bit	Dx600.0	*High Speed Link* RUN_LINK information	This indicates that all station are acting normally according to the parameter set in the high speed line and will be 'ON' under the following conditions. 1. When all station set in the parameter is RUN mode and there is no error, 2. When all data block set in the parameter is communicating normally, 3. When the parameter set in the parameter of each station itself is communicating normally, Once 'ON', RUN-LINK maintains the 'ON' unless stopped by Disable.
_HSmLTRBL	Bit	Dx600.1	Abnormal information of *High Speed Link* (LINK_TROUBLE)	In the status that _HSmRLINK is ON, if the communication status of the station set in the parameter and the data block is as follows, this flag shall be ON. 1. When the station set in the parameter is not RUN mode, 2. When there is an error in the station set in the parameter, 3. When the communication status of data block set in the parameter is not smooth, LINK-TROUBLE shall be ON if the above 1,2,3 condition occurs, and if the condition returned to the normal condition, it shall be OFF.
_HSmSTATE[k] (k=0~63)	Bit Array	Dx601.0 ~ Dx604.15	General communication status information of k data block set in the *High Speed Link* parameter	This indicates the general status of communication information for each data block of the setting parameter. _HSmSTATE[k] = _HSmMOD[k] & _HSmTRX[k] & _HSmERR[k]

Keyword	Type	Bit position	Items	Description
_HSmMOD[k] (k=0~63)	Bit Array	Dx605.0 ~ Dx608.15	Mode information (RUN = 1, others = 0)	Indicates the action mode of the station set in k data block of parameter.
_HSmTRX[k] (k=0~63)	Bit Array	Dx609.0 ~ Dx612.15	Status information (normal=1, abnormal=0)	Indicates whether the communication status of k data block of the parameter is communicating smoothly as set in the parameter.
_HSmERR[k] (k=0~63)	Bit Array	Dx613.0 ~ Dx616.15	The status information of the station set in k data block from the *High Speed Link* parameter. (normal=1, abnormal=0)	Indicates if the error occurs in the station set in k data block of the parameter.

High Speed Link detail flag when m=1~3

HS link type	D area address no.	Remarks
*High Speed Link*2 (m=1)	Dx620 ~ Dx633	Comparing with m=0, D area address no. is as follows when m=3. Calculation formula : when m=1~3, D area address no. address no. + 20 × m
*High Speed Link*3 (m=2)	Dx640 ~ Dx653	
*High Speed Link*4 (m=3)	Dx660 ~ Dx673	

7.4 Program Example

7.4.1 GLOFA-GM Series

Program Example 1 :

In GM3 base, the communication module (G3L-RUEA) is installed for slot 0, output 32 points for slot 1, and input 32 points for slot 2, respectively. This is the example to send GM3 %IW0.2.0 data to station 1 and output the data of station 2 to GM3 %QW0.1.0.

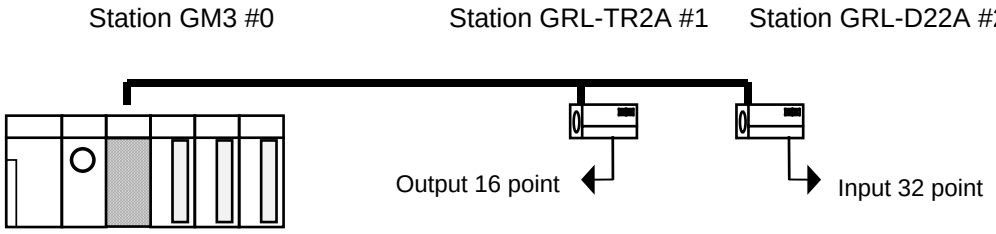

To perform the program example, first make the I/O configuration table as shown on the table below and write the *High Speed Link* parameter in the corresponding CPU module, respectively.

I/O configuration and Sending/receiving flow

Sending/receiving structure	Area to read	Storage area	Block no.	Size
Sending from GM3→station 1	%IW0.2.0	%QW0.0.0	0	1
Receiving from GM3←station 2	%IW0.0.0	%QW0.1.0	1	1

Working order

1) Station number allocation and communication cable connection
2) The user program writing (per each station)
3) Make the data sending/receiving map same type of the above table
4) Parameter setting in GMWIN *High Speed Link* parameter setting item
5) Execute ‘compile’ and ‘make’ from compile menu
6) Execute program and parameter write from online menu.
7) Select ‘Link Enable set’ from online menu and set the *High Speed Link* Enable that corresponds to the setting no.
8) Change the mode to RUN from online menu.
9) Start ‘monitor’ from online menu and check if RUN-LINK is ON without error in the *High Speed Link* monitor.
10) If the error occurs, repeat the above from 1).

Sending parameter setting from GM3 station 0 to station 1

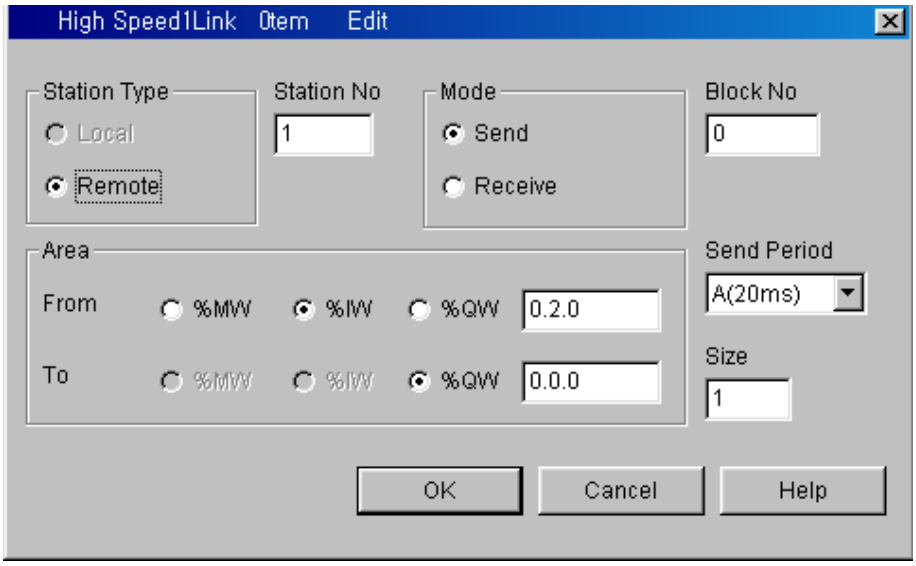

Receiving parameter setting by GM3 station 0 from station 2

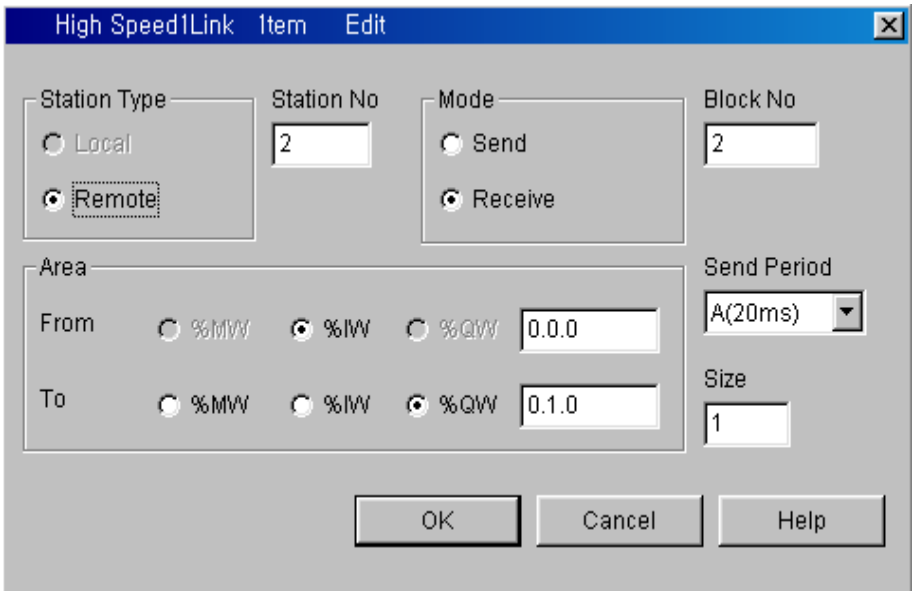

Remark

1) Do not register the same station no. more than 2 or the same block no. more than 2.

7.4.2 MASTER-K Series

Program Example 1

Here describes the *High Speed Link* parameter setting method to perform the data communication in RNET master system below with the I/O structure same as shown on the table below.

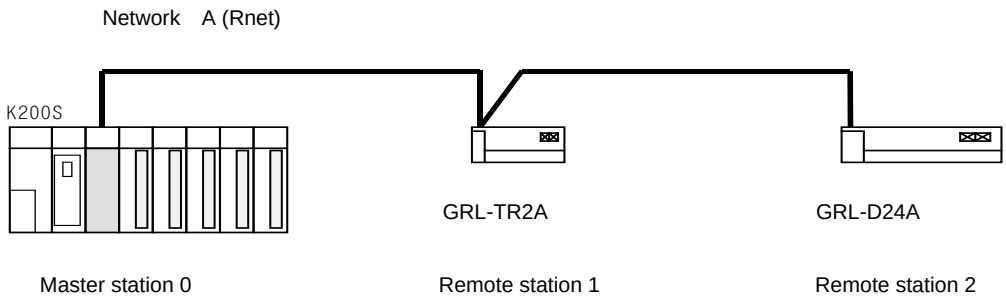

I/O configuration and Sending/receiving flow

Sending/receiving structure		Sending area	Receiving area
K200S (station 0)	Sending :--> GRL-TR2A(station 1)	P0003	-
		-	P000
	Receiving :<-- GRL-D24A(station 2)	P0000	-
		-	P0004

From the example, K200S CPU sends the input value of input module (P3) installed in self station slot 2 by 1 word and outputs the data received from other station to P4 output module. The *High Speed Link* parameter configuration and program for data exchange on the above is described in the figure below. The program can be used in common and sets only link parameter respectively. (it is available to use the same program and parameter in the K1000S/K300S RNET communication.)

1) The user program writing

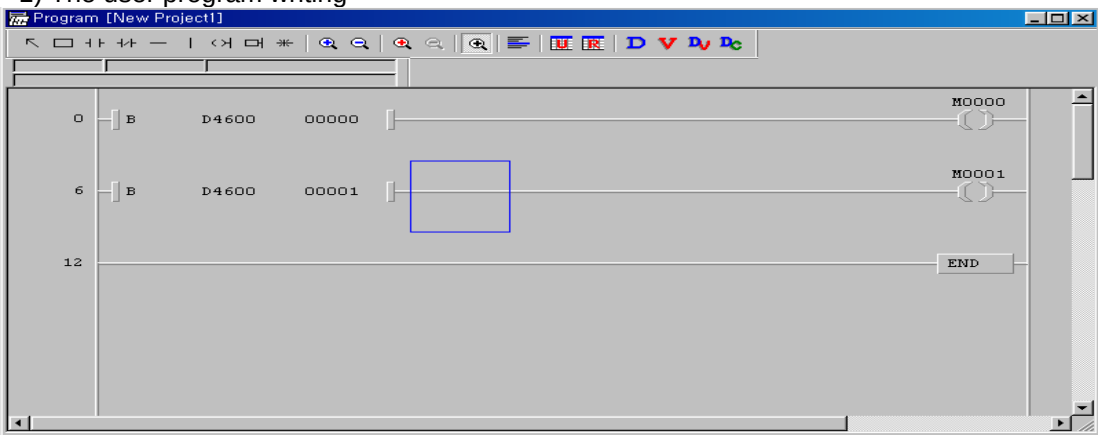

The above figure is the program to set M0000 area when RUN-LINK is ON and M0001 area when LINK-TROUBLE flag is ON.

(B) *High Speed Link* parameter setting

To make Station 0,1,2 to change the data as specified on the table in the master configuration system, the user should write the user program first and then prepare the data sending/receiving map as shown on the table. And to send/receive the data as shown on the table, it is required to write the *High Speed Link* parameter and download it in PLC and the *High Speed Link* start shall be carried out according to the following order.

1) Station number allocation and communication cable connection
2) The user program writing (per each station)
3) Make the data sending/receiving map
4) Parameter setting in KGLWIN *High Speed Link* parameter setting item
5) Execute program and parameter download from the online menu
6) Change the mode to RUN from the online menu.
7) Check the *High Speed Link* status through flag monitor
8) If the error occurs, repeat the above from 1).

The *High Speed Link* parameter for the system of program example is set as follows.

K200S (station 0) High Speed Link parameter

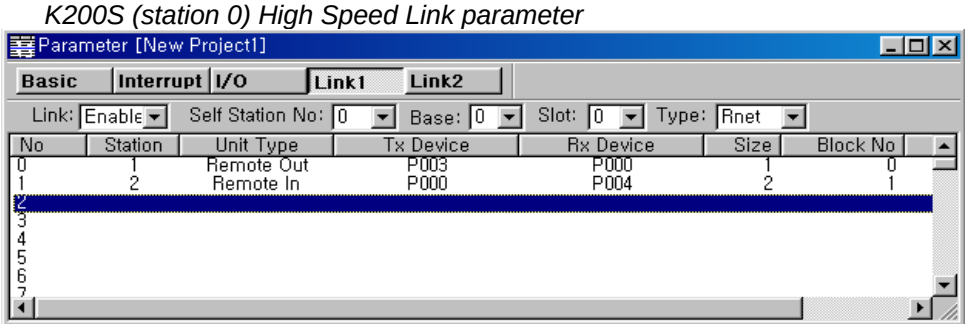

(C) *High Speed Link* speed fixing method.

The system of Example 1) is a simple system that the communication module of station 3 sends/receives the data of 1word per each station. And the calculation method for communication speed is as follows.

Formula St = P_scanA + C_scan

St = *High Speed Link* max. transmission time

P_scanA = PLC A max. program scan time

C_scan = max. communication scan time

As P_scanA is PLC scan time on the above, if assuming that it is 3ms each for the above program, (available to verify through online-information read-PLC information)

C_scan = n1 x 180us + n2 x 828us + 1,000us ----------[formula 7-1]

n1 : output station number

n2 : input station number

C_scan = 1 x 180 + 1 x 828 + 1,000 = 2,008us

St = P_scanA(=3ms) + Cscan(2ms) = 5ms

Therefore, the sending/receiving period should be set as min. more than 5ms.

Chapter 8 Modbus Communication

8.1 Overview

Smart I/O module communication supports modbus through GM3/4/6/7 master module. (G3L-CUEA/G4L-CUEA/G6L-CUEC/G7L-CUEC)
This supports ASCII mode that communicates using ASCII (American Standard Code for Information Interchange) data and RTU (Remote Terminal Unit) mode that uses HEX data and the function code used in the modbus is supported by the *Function Block* and only function code 01, 02, 03, 04, 05, 06, 15, 16 are supported.
For further information for the protocol, please refer to 'Modicon Modbus Protocol Reference Guide'. (http://www.modicon.com/techpubs/toc7.html)

8.2 Communication Specification

1) ASCII Mode

(1) This communicates using ASCII data.
(2) Each frame uses ':(Colon) : H3A)' for the header, CRLF(Carriage Return-Line Feed) : HOD HOA) for the tale.
(3) Max. 1second interval between Characters is allowed.
(4) It uses LRC to check the error.
(5) Frame structure (ASCII data)

Classification	Header	Station no.	Function code	Data	LRC	Tale (CR LF)
Size	1 byte	2 byte	2 byte	n byte	2 byte	2 byte

2) RTU Mode

(1) It uses HEX data to communicate.
(2) There is no header and tale and it starts from station no.(Address) and ends the frame with CRC.
(3) It has min. 3.5 Character Time Interval between frames.
(4) When exceeding more than 1.5 Character Time between Character, please disregard the corresponding frame.
(5) It uses 16 bit CRC to check the error.
(6) Frame structure (HEX data)

Classification	Station no.	Function code	Data	CRC
Size	1 byte	1 byte	n byte	2 byte

Remark

1) The size to compose one letter (character) is called '1 character', that is, 1 character is 8bits = 1byte.
2) 1 character time means the time to take when sending 1 character.
   Ex.1) 1 character time calculation in communication speed 2,400 bps
   2,400 bps is the speed that takes 1 second to send 2,400 bits. When sending 1 bit, 1(sec)÷2,400(bit) = 0.41(ms).
   Thus, 1 character time is 0.41(ms)×8(bit) = 3.28(ms).

In case of 584, 984A/B/X, the internal processing performs the frame classification using the interval more than 1sec without LRC.

3) Station no.(Address) Area

(1) Smart I/O series supports 0 ~ 31.

(2) Station 0 uses Broadcast address. Broadcast address is the station no. the salve device except self station no. recognizes and responds, and it does not support in Smart I/O series.

4) Function Code Area

(1) In Smart I/O series, it supports Modicon function code 01, 02, 03, 04, 05, 06, 15, 16 only.

(2) When the response format is Confirm+ (ACK response), the same function code is used.

(3) When the response format is Confirm- (NCK response), set the 8th bit of function code as '1' and return.

Ex) when function code is 03,
- specify only the function code part as there is a difference in the function code only.

[Request] 0000 0011 (H03)

[Confirm+] 0000 0011 (H03)

[Confirm-] **1**000 0011 (H83)

Set the 8th bit of frame function code as '1' and return.

5) Data Area

(1) It transmits the data using ASCII (ASCII mode) data or HEX (RTU mode).

(2) The data structure is changed according to each function code.

(3) Response frame uses the data area as response data or error code.

6) Error Check (LRC Check/CRC Check) Area

(1) LRC (Longitudinal Redundancy Check) : this is used in ASCII mode and takes the 2's complement from the sum of frame except the header/the tale and carries out the ASCII conversion.

(2) CRC (Cyclical Redundancy Check) : this is used in RTU mode and uses 2 bytes of CRC check regulations.

Remark

All numeric data uses by mixing the hexadecimal, decimal, binary number. Each number is specified as following example.

The example that decimal number 7, 10 is marked as each number

Hexadecimal : H07, H0A or 16#07, 16#0A

Decimal : 7, 10

Binary : 2#0111, 2#1010

7) Function Code Type and Memory Mapping

Code	Function code name	Modicon PLC Data address	Smart I/O Mapping	Remarks
01	Read output contact status (Read Coil Status)	0XXXX(bit-output)	%QX0~%QX31	Bit read
02	Read input contact status (Read Input Status)	1XXXX(bit-input)	%IX0~%IX31	Bit read
03	Read output registers (Read Holding Registers)	4XXXX(word-output)	%QW0~%QW3	Bit read
04	Read input register (Read Input Registers)	3XXXX(word-input)	%IW0~%IW3	Word read
05	Write output contact 1 bit (Force Single Coil)	0XXXX(bit-output)	%QX0~%QX31	Bit write
06	Write output register 1 word (Preset Single Register)	4XXXX(word-output)	%QW0~%QW3	Word write
15	Write output contact continuously (Force Multiple Coils)	0XXXX(bit-output)	%QX0~%QX31	Bit write
16	Write output register continuously (Preset Multiple Register)	4XXXX(word-output)	%QW0~%QW3	Word write

MASTER-K Mapping

Bit area		Word area	
Address	Data area	Address	Data area
H0000	P area	h0000	P area
H1000	M area	H1000	M area
H2000	L area	H2000	L area
H3000	K area	H3000	K area
H4000	F area	H4000	F area
H5000	T area (contact)	H5000	T area (current value)
H6000	C area (contact)	H6000	C area (current value)
		H7000	S area
		H8000, H9000	D area

8) Modbus Addressing Regulation

(1) GLOFA-GM series

In Smart I/O series, the address in the frame begins from '0' and maps with Modicon data address 1, and 'n'th address of Smart I/O series becomes Modicon address n+1. And in Smart I/O series, it uses only the continuous M area without distinguishing by output contact (0XXXX), input contact (1XXXX), output register (4XXXX), input register (3XXXX). That is, the output contact 1(00001) of Modicon product is indicated as the address '0' of communication frame and the input contact 1(10001) of Modicon product is indicated as the address '0' of communication frame.

Output contact(**0**XXXX), input contact(**1**XXXX), output register(**4**XXXX), input register(**3**XXXX)

Most significant data of data address in Modicon product that distinguishes output contact, input contact, output register, input register.

(2) MASTER-K series

XXXX area of Modicon PLC data address is allocated by the mapping of MASTER-K series. For example, when you try to read M0002 bit of MASTER-K in Modicon PLC, use the function code 01 or 02 and set the data address as H1002. When you try to read D0010 word area, use the function code 03 or 04 and set the address as H800A.

9) Data Size

Smart I/O series supports the data size of 128bytes for ASCII mode and 256bytes for RTU mode and as max. value of Modicon is different according to the model, please refer to 'Modicon Modbus Protocol Reference Guide'.

10) Wiring diagram

	PIN spec.	Smart I/O (9-PIN)
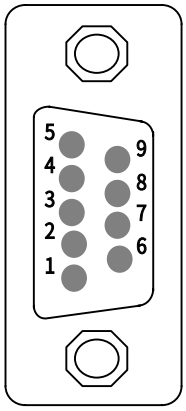 Male Type	1	(1) No.1 : reserved(OS Upgrade) (2) No.2 : reserved(OS Upgrade) (3) No.3 : RX- (4) No.4 : RX+ (5) No.5 : GND (6) No.6/7: reserved (7) No.8 : TX- (8) No.9 : TX+
	2	
	3	
	4	
	5	
	6	
	7	
	8	
	9	

8.3 Communication Parameter Setting

8.3.1 GLOFA-GM Series

8.3.1.1 In case of GM3/4/6 is the master,

1) Insert communication *Function Block*

When communicating modbus communication with Smart I/O using GM3/4/6 as the master, it is required to insert the following *Function Block* library into GMWIN.

Classification		Corresponding *Function Block* library	Remarks
GM3	G3L-CUEA	Modbus.3FB	GMWIN Library adding
GM4	G4L-CUEA	Modbus.4FB	
GM6	G6L-CUEA	Modbus.6FB	

(1) Select GMWIN menu [project] → [library insert] and insert the corresponding library per model.

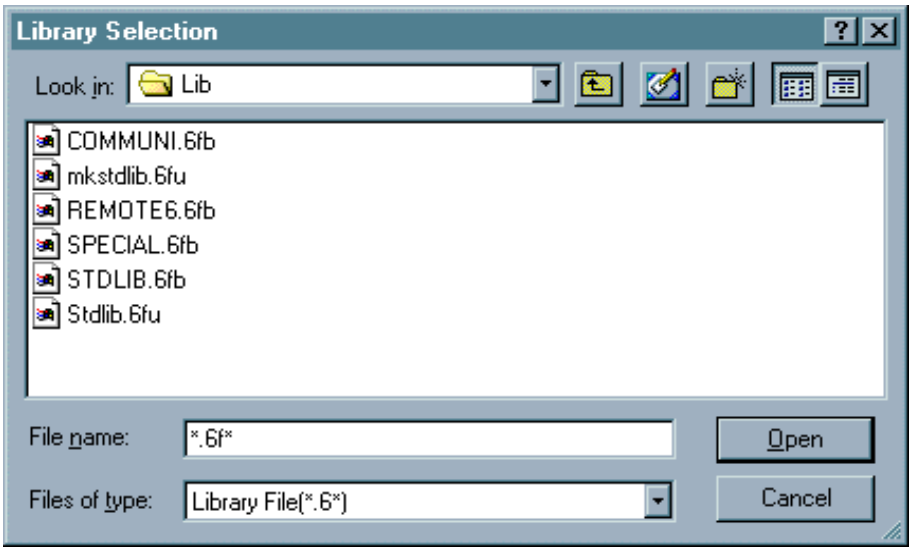

(2) Insert the *Function Block* into GMWIN scan program and set the *Function Block* I/O variable.

For the *Function Block* type and the method to use, please refer to Chapter 8.4. *Function Block*.

- RTU_WR
- RTU_RD

8.3.1.2 In case of GM7 is the master,

1) Communication parameter setting

(1) Open the new project file in GMWIN.

- Select 'GM7' as PLC type.
- Create new project file for the master and the slave, respectively.

(2) Select communication parameter from GMWIN parameter and doubleclick and the following figure will appear.

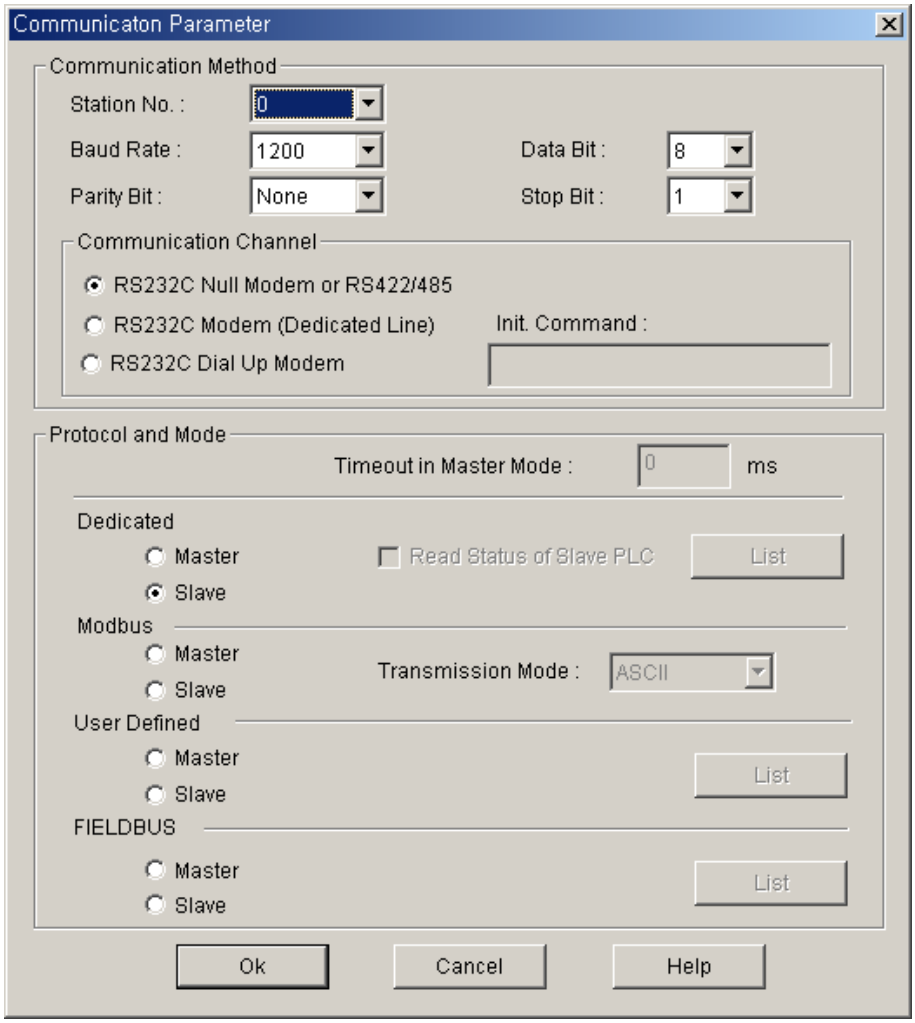

3) Set the contents as follows.

Items	Setting Description
Self station no.	Available to set 1~31 stations. (do not set station 0 as broadcast station no. It may cause the failure.)
Communication speed	Available to set 2400, 4800, 9600, 19200, 38400 bps.
Data bit	Available to set as 7 or 8 bits. ASCII mode : set as 7 bits. RTU mode : set as 8 bits.
Parity bit	Available to set as None, Even, Odd.
Stop bit	Available to set as 1 or 2 bits. In case that the parity bit is set : set as 1 bit. In case that the parity bit is not set : set as 2 bits.
Communication channel	• RS-232C null modem or RS422/485 : when communicating using GM7 basic unit and Cnet I/F module (G7L-CUEC). • RS-232C dedicated modem : when communicating by the dedicated modem using Cnet I/F module (G7L-CUEB). • RS-232C dialup modem : when communicating by the general modem connecting with other station by the phone using Cnet I/F module (G7L-CUEB). Note) RS-232C exclusive modem and RS-232C dialup modem communication is done only by Cnet I/F module (G7L-CUEB) that supports RS-232C but not by Cnet I/F module (G7L-CUEC) that supports RS-422/485.
Time out when setting the master	• This is the time to wait the response frame after sending the request frame from GM7 basic unit set as the master. • Default value is 500ms. • When setting, max. sending/receiving period of master PLC should be considered. • If the value smaller than max. sending/receiving period is set, it may cause the communication error.
Modbus master / slave	If setting as the master, it shall be the subject in the communication system and if setting as the slave, it will reply only according to the request frame of the master.
Transmission mode	Available to select one from ASCII mode or RTU mode.

8.3.2 MASTER-K Series

8.3.1.1 K80S modbus communication

1) Communication parameter setting

(1) Open new project file in KGLWIN.

- Select MK80S as PLC type.
- Create new project file for the master and the slave respectively.

(2) Select communication parameter from KGMWIN parameter and doubleclick, and the following figure will appear.

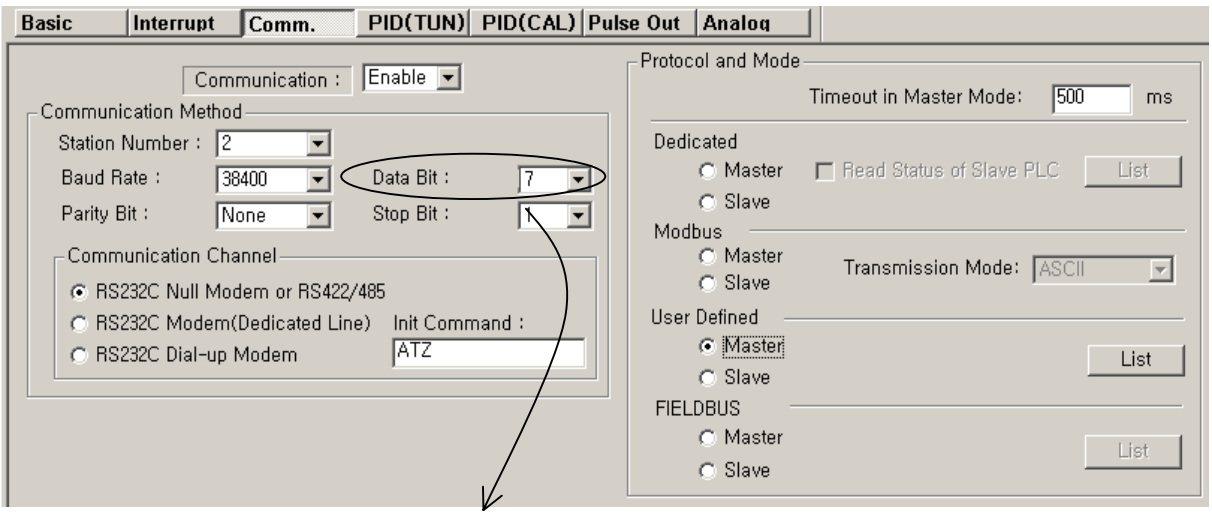

When transmission mode is ASCII mode, set as 7 bits.

Set the contents as follows.

Items	Setting Description
Self station no.	Available to set 1~31 stations. (do not set station 0 as broadcast station no. It may cause the failure.)
Communication speed	Available to set 2400, 4800, 9600, 19200, 38400 bps.
Data bit	Available to set as 7 or 8 bits. ASCII mode : set as 7 bits. RTU mode : set as 8 bits.
Parity bit	Available to set as None, Even, Odd.
Stop bit	Available to set as 1 or 2 bits. When the parity bit is set : set as 1 bit. When the parity bit is not set : set as 2 bits.

Communication channel	• RS-232C null modem or RS-422/485 : when communicating using MK80S basic unit and Cnet I/F module (G7L-CUEC). • RS-232C dedicated modem : when communicating by the dedicated modem using Cnet I/F module (G7L-CUEB). • RS-232C dialup modem : when communicating by the general dialup modem using Cnet I/F module (G7L-CUEB). Note) RS-232C dedicated modem and RS232C dialup modem communication is done by Cnet I/F module (G7L-CUEB) only that supports RS-232C and not by Cnet I/F module (G7L-CUEC) that supports RS-422/485.
Timeout when setting the master	• This is the time to wait the response frame after sending the request frame from MK80S basic unit set as the master. • Default value is 500ms. • When setting, max. sending/receiving period of master PLC should be considered. • If the value smaller than max. sending/receiving period is set, it may cause the communication error.
Modbus master / Slave	If setting as the master, it shall be the subject in the communication system and if setting as the slave, it will reply only according to the request frame of the master.
Transmission mode	Available to select one from ASCII mode or RTU mode.

8.4 Function Block

8.4.1 GLOFA-GM Series

8.4.1.1 for GM3/4/6

1) RTU_RD

Item	IN / OUT	Type	Description
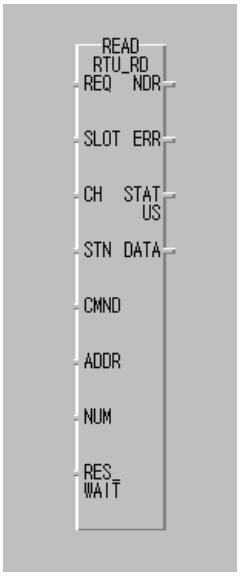	REQ	BOOL	*Function Block* execution condition (Rising edge action) - When changing from 0 to 1, one time executed.
	SLOT	USINT	Cnet module slot no. (0 ~ 7)
	CH	USINT	Channel setting (0 : RS-232C, 1 : RS-422/485)
	STN	USINT	Other station no. setting (0 ~ 32)
	CMND	USINT	Modbus Command (1 ~4) 1 : Read coil status (Bit) 2 : Read input status (Bit) 3 : Read holding register (Word) 4 : Read input register (Word)
	ADDR	INT	Leading address of other station to Read (1 ~ 9999)
	NUM	USINT	Data number to Read (1 ~ 64)
	RES_WAIT	TIME	Response wait time (after the setting wait time, eceive the response data from Cnet module of CPU.)
	NDR	BOOL	After completing the normal communication, 1Scan 'ON'.
	ERR	BOOL	When communication error occurs, 1Scan 'ON'.
	STATUS	USINT	Communication status code (Error code) 0 : normal, if not 0, : Error code
	DATA	USINT ARRY (256)	Receiving data storage area Array [0] : High Byte of first word Array [1] : Low Byte of first word Array [2] : High Byte of second word Array [3] : Low Byte of second word ...

(1) Function

This is the *Function Block* that is executed by selecting function code 01, 02, 03, 04 from modbus protocol communication and used for Bit/Word Read. Function code 01 executes output contact status (Coil Status) Data Read and function code 02 executes input contact status (Input Status) Data Read. Function code 03 executes output register (Holding Registers) Data Read and function code 04 executes input register(Input Registers) Data Read.

(2) Error

Output the error code from output STATUS. For further information, please refer to error code.

Remark

Response Wait Time setting

1) After the setting wait time, receive the response data from Cnet module of CPU.
2) If the response does not reach from other station within the setting time, error (code 74 or code 10) occurs. This *Function Block* acts in Cnet function '**User definition Protocol Mode'**.
3) Response Wait Time shall be set considering Read/Write data number, transmission speed (Baudrate), the response speed of other station etc.
4) When setting, please refer to the table below and if error occurs, extend the setting time.

Classification	1 ~ 16 word	17 ~ 32 word	33 ~ 48 word	49 ~ 64 word
4800 bps	150ms	250ms	330ms	400ms
9600 bps	100ms	180ms	230ms	280ms
19200 bps	80ms	150ms	180ms	230ms

2) RTU_WR

Item	IN / OUT	Type	Description
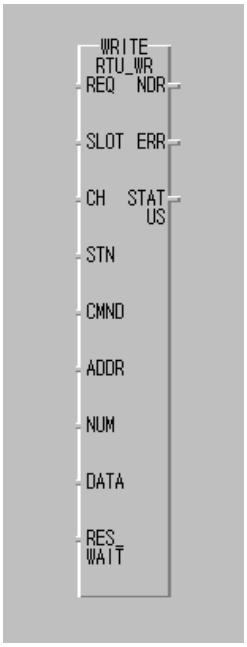	REQ	BOOL	*Function Block* execution condition (Rising edge action) - When changing from 0 to 1, one time executed.
	SLOT	USINT	Cnet module slot no. (0 ~ 7)
	CH	USINT	Channel setting (0 : RS-232C, 1 : RS-422/485)
	STN	USINT	Other station no. setting (0 ~ 32)
	CMND	USINT	Modbus Command (15 ~ 16) 15 : Force Multiple coils(Bit) 16 : Preset Multiple register (Word)
	ADDR	INT	Leading address to Write (1 ~ 9999)
	NUM	USINT	Data number to Write (1 ~ 64)
	RES_WAIT	TIME	Response wait time (after the setting wait time, receive the response data from Cnet module of CPU.)
	NDR	BOOL	After completion of the normal communication, 1Scan 'ON'.
	ERR	BOOL	When communication error occurs, 1Scan 'ON'.
	STATUS	USINT	Communication status code (Error code) 0 : normal, if not 0, : Error code
	DATA	USINT ARRY (256)	Self station data storage area to Write Array [0] : High Byte of first word Array [1] : Low Byte of first word Array [2] : High Byte of second word Array [3] : Low Byte of second word ...

(1) Function

This is the *Function Block* to execute by selecting function code 15 and 16 from modbus protocol communication and used for Continuous 1 bit Write (function code 15), Continuous 1 word Write (function code 16). Function code 15 performs 1 bit Data Write to output contact (Coil) continuously and function code 16 performs 1 word Data Write to output register (Holding Registers) continuously.

(2) Error

Output the error code to output STATUS. For further information, please refer to the error code.

Remark

1) This *Function Block* acts in Cnet function '**User Definition Protocol Mode'.**
2) Basic parameter (Baudrate, Data bit, Stop bit, Parity check, Station No. etc.) shall be set in Cnet editor and the frame editing is not needed.
3) This supports Modbus RTU Protocol. (scheduled to support ASCII Protocol later)
4) Cnet module requirements to use this *Function Block* are as follows.
   - Cnet module version : more than v2.0 (available to verify in GMWIN)
   - Cnet module Flash Rom OS version : more than v1.01 (available to verify in Cnet Editor)
   - Modbus.Nfb (Modbus *Function Block* file, N=3,4,6) needed.

Error code table

Status code (Dec)	Description	Solution	Remarks
0	Normal	No error	
1	Illegal command (When the master requires the command that the Slave does not support.)	After confirming the command available to support by the Slave, modify the command on FB.	The error returned from the Slave
2	Illegal address (When the Master requires the address that the Slave does not support.)	After confirming the address available to support by the Slave, modify the address on FB.	
3	Illegal data value (When the Master requires the data of the range that the Slave does not support.)	After confirming the data range available to support by the Slave, modify the data on FB.	
4	Slave device failure (The unrecoverable error occurs while performing the Master requirements in the Slave.)	Check the Slave station status.	
6	Slave device busy	After waiting for the regular time, Master	
10	Receiving Frame CRC error	1. After confirming the receiving frame status, extend the Response Wait Time. 2. Check the Cable and Noise status.	Function Block internal error
16	Cnet module I/F error (No Cnet module in the designated slot.)	Check the slot no. designated on FB.	
64	Channel (232c/422) stop	RUN the Cnet module. (power reinput)	

74	Time out error	1. Check the basic parameter (station no./speed etc.) 2. Check the Slave station status (power etc.) 3. Check the Cable status and connecton	
115	Communication mode error	Check if Cnet user definition	

8.4.1.2 for GM7

1) MOD0102

Function Block	Description
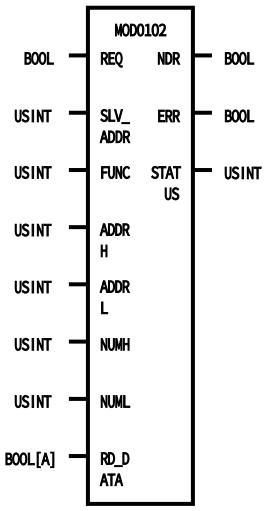	**Input** REQ : When 1(rising edge), *Function Block* execution SLV_ADDR : Slave station no. input FUNC : Function code input It supports function code 01 and 02. ADDRH : High address of starting address to read in the Slave station. ADDRL : Low address of starting address to read in the Slave station. NUMH : High address of data size to read from the starting address to read in the Slave station. NUML : Low address of data size to read from the starting address to read in the Slave station. **Output** RD_DATA : Variable name to save the Read data.(Array number should be declared as equal to or greater than the data size.) NDR : If executing without error, output 1 and maintain 1 until calling next *Function Block*. ERR : When error occurs, output 1 and maintain 1 until calling next *Function Block*. STATUS : When error occurs, output the error code.

(3) Function

This is the *Function Block* to execute by selecting function code 01 and 02 from modbus protocol communication and used for Bit Read. Function code 01 performs output contact status (Coil status) data Read and function code 02 performs input contact status (Input Status) data Read.

(4) Error

Output the error code to the Output STATUS. For further information, please refer to the error code.

(5) Program Example

① This is the example when GM7 basic unit is the Master and when reading output contact data of Modicon product that is station no.17.

- Execute the Status Read of output contact (Coil) 00020 ~ 00056 of the Slave station (Station no.17). The output contact of the Slave station is assumed as follows and the read data is saved in the BOOL type random array variable RD_DB0 whose size is 40.

Output contact	59	58	57	56	55	54	53	52	51	50	49	48	47	46	45	44	43	42	41	40
Contact status	X	X	X	1	1	0	1	1	0	0	0	0	1	1	1	0	1	0	1	1
Hexa	1				B				0				E				B			
Output contact	39	38	37	36	35	34	33	32	31	30	29	28	27	26	25	24	23	22	21	20
Contact status	0	0	1	0	0	1	1	0	1	0	1	1	1	1	0	0	1	1	0	1
Hexa	2				6				B				C				D			

<Data status of Modicon product output contact (00020~00059)>

- The status of output contact 57,58,59 is Redundancy.
- The data shall be transmitted from low bit by byte unit. The insufficient bit part of the byte shall be filled with ‘0’. The transmission of the above data is shown on Ex.1).

  Ex.1) CD 6B B2 0E 1B

Function Block input	Input value
REQ	Enter the input condition to run.
SLV_ADDR	16#11 or 17 : Slave station no.
FUNC	16#01 or 1 : Enter ‘1’ when reading output contact status.
ADDRH	16#00 or 0 : High byte among the address starting to read from the Slave station.
ADDRL	16#13 or 19 : Low byte among the address starting to read from the Slave station. - In order to read from output contact 00020, it is required to read **from no.19** according to the 8) modbus addressing regulation. And most significant data of data address shall be processed internally automatically by the input value of *Function Block* input FUNC without separate input.

NUMH	16#00 or 0	: High byte when expressing total size of data to read by Hexa.
NUML	16#25 or 37	: Low byte when expressing total size of data to read by Hexa. - From the example, it is required to read 00020 ~ 00056 and total size of data shall be 37. If expressing 37 by Hexa, it shall be H0025 and it is required to enter H00 for NUMH and H25 for NUML.

- Results

Variable name	Storage value	Variable name	Storage value	Variable name	Storage value	Variable name	Storage value
RD_DB0[0]	1	RD_DB0[10]	0	RD_DB0[20]	1	RD_DB0[30]	0
RD_DB0[1]	0	RD_DB0[11]	1	RD_DB0[21]	1	RD_DB0[31]	0
RD_DB0[2]	1	RD_DB0[12]	0	RD_DB0[22]	0	RD_DB0[32]	1
RD_DB0[3]	1	RD_DB0[13]	1	RD_DB0[23]	1	RD_DB0[33]	1
RD_DB0[4]	0	RD_DB0[14]	1	RD_DB0[24]	0	RD_DB0[34]	0
RD_DB0[5]	0	RD_DB0[15]	0	RD_DB0[25]	1	RD_DB0[35]	1
RD_DB0[6]	1	RD_DB0[16]	0	RD_DB0[26]	1	RD_DB0[36]	1
RD_DB0[7]	1	RD_DB0[17]	1	RD_DB0[27]	1	RD_DB0[37]	X
RD_DB0[8]	1	RD_DB0[18]	0	RD_DB0[28]	0	RD_DB0[38]	X
RD_DB0[9]	1	RD_DB0[19]	0	RD_DB0[29]	0	RD_DB0[39]	X

- The variable to save the read data should be array type variable and the size of array type variable should be equal to or greater than that of the data to read. If it is smaller, error code shall be indicated on the STATUS.
- The read data shall be saved from array variable RD_DB0[0].
- The remaining part after filling the array variable by the read data shall be redundancy.

② This is the example when GM7 basic unit is the Master and when reading input contact data of Modicon product that is station no.17.

- Execute the Status Read of input contact (Input) 10197 ~ 10218 of the Slave station (Station no.17). The input contact of the Slave station is assumed as follows and the read data is saved in the BOOL type random array variable RD_DB1 whose size is 24.

Input contact	10220	10219	10218	10217	10216	10215	10214	10213	10212	10211	10210	10209
Contact status	X	X	1	1	0	1	0	1	1	1	0	1
Hexa	3				5				D			
Input contact	10208	10207	10206	10205	10204	10203	10202	10201	10200	10199	10198	10197
Contact status	1	0	1	1	1	0	1	0	1	1	0	0
Hexa	B				A				C			

- The status of Input contact 10219, 10220 is Redundancy.
- The data shall be transmitted from low bit by byte unit. The insufficient bit part of the byte shall be filled with '0'. The transmission of the above data is shown on Ex.1).

  Ex.1) AC DB 35

Function Block input	Input value
REQ	Enter the input condition to run.
SLV_ADDR	16#11 or 17 : Slave station no.
FUNC	16#02 or 2 : Enter '2' when reading the input contact status.
ADDRH	16#00 or 0 : High byte among the address starting to read from the Slave station.
ADDRL	16#C4 or 196 : Low byte among the address starting to read from the Slave station. - In order to read from input contact 10197, it is required to read **from no.196** according to the 8) modbus addressing regulation. And most significant data of data address shall be processed internally automatically by the input value of *Function Block* input FUNC without separate input.
NUMH	16#00 or 0 : High byte when expressing total size of data to read by Hexa
NUML	16#16 or 22 : Low byte when expressing total size of data to read by Hexa. - From the example, it is required to read 10197 ~ 10218 and total size of data shall be 22. If expressing 22 by Hexa, it shall be H0016 and it is required to enter H00 for NUMH and H16 for NUML.

- Results

Variable name	Storage value	Variable name	Storage value	Variable name	Storage value	Variable name	Storage value
RD_DB1[0]	0	RD_DB1[6]	0	RD_DB1[12]	1	RD_DB1[18]	1
RD_DB1[1]	0	RD_DB1[7]	1	RD_DB1[13]	0	RD_DB1[19]	0
RD_DB1[2]	1	RD_DB1[8]	1	RD_DB1[14]	1	RD_DB1[20]	1
RD_DB1[3]	1	RD_DB1[9]	1	RD_DB1[15]	1	RD_DB1[21]	1
RD_DB1[4]	0	RD_DB1[10]	0	RD_DB1[16]	1	RD_DB1[22]	X
RD_DB1[5]	1	RD_DB1[11]	1	RD_DB1[17]	0	RD_DB1[23]	X

- The variable to save the read data should be array type variable and the size of array type variable should be equal to or greater than that of the data to read. If it is smaller, error code shall be indicated on the STATUS.
- The read data shall be saved from array variable RD_DB1[0].
- The remaining part after filling the array variable by the read data shall be redundancy.

2) MOD0304

Function Block	Description
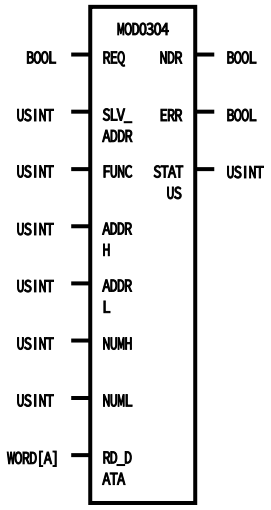	**Input** REQ : When 1(rising edge), *Function Block* execution SLV_ADDR : Slave station no. input FUNC : Function code input It supports function code 03 and 04. ADDRH : High address of starting address to read in the Slave station. ADDRL : Low address of starting address to read in the Slave station. NUMH : High address of data size to read from the starting address to read in the Slave station. NUML : Low address of data size to read from the starting address to read in the Slave station. **Output** RD_DATA : Variable name to save the Read data. (Array number should be declared as equal to or greater than the data size.) NDR : If executing without error, output 1 and maintain 1 until calling next *Function Block*. ERR : When error occurs, output 1 and maintain 1 until calling next *Function Block*. STATUS : When error occurs, output the error code.

(1) Function

This is the *Function Block* to execute by selecting function code 03 and 04 from modbus protocol communication and used for Word Read. Function code 03 performs output register (Holding Registers) data Read and function code 04 performs input register (Input Registers) data Read.

(2) Error

Hold the error code to the Output STATUS. For further information, please refer to the error code.

(3) Program Example

① This is the example when GM7 basic unit is the Master and when reading output register data of Modicon product that is station no.17.

- Execute the Read of output register (Holding Registers) 40108 ~ 40110 of the Slave station (Station no.17). The output register of the Slave station is assumed as follows and the read data is saved in the WORD type random array variable RD_DW0 whose size is 4.

Output Register	40110	40109	40108
Register Status	H0064	H0000	H022B

- The data shall be transmitted from high byte of low word by byte unit. The transmission of the above data is shown on Ex.1).

  Ex.1) 02 2B 00 00 00 64

Function Block input	Input value
REQ	Enter the input condition to run.
SLV_ADDR	16#11 or 17 : Slave station no.
FUNC	16#03 or 3 : Enter '3' when reading output register.
ADDRH	16#00 or 0 : High byte among the address starting to read from the Slave station.
ADDRL	16#6B or 107 : Low byte among the address starting to read from the Slave station. - In order to read from output register 40108, it is required to read **from no.107** according to the 8) modbus addressing regulation. And most significant data of data address shall be processed internally automatically by the input value of *Function Block* input FUNC without separate input.
NUMH	16#00 or 0 : High byte when expressing total size of data to read by Hexa.
NUML	16#03 or 3 : Low byte when expressing total size of data to read by Hexa. - From the example, it is required to read 40108 ~ 40110 and total size of data shall be 3. If expressing 3 by Hexa, it shall be H0003 and it is required to enter H00 for NUMH and H03 for NUML.

- Results

Variable name	Storage value
RD_DW0[0]	H002B or 555
RD_DW0[1]	H0000 or 0
RD_DW0[2]	H0064 or 100
RD_DW0[3]	X

- The variable to save the read data should be array type variable and the size of array type variable should be equal to or greater than that of the data to read. If it is smaller, error code shall be indicated on the STATUS.
- The read data shall be saved from array variable RD_DW0[0].
- The remaining part after filling the array variable by the read data shall be redundancy.

② This is the example when GM7 basic unit is the Master and when reading input register data of Modicon product that is station no.

- Execute the Read of input register (Input Registers) 30009 of the Slave station (Station no.17). The input register of the Slave station is assumed as follows and the read data is saved in the WORD type random array variable RD_DW1 whose size is 2.

Input Register	30009
Register Status	H000A

- The data is transmitted from high byte of low word by byte unit. The transmission of the above data is shown on Ex.1).

  Ex.1) 00 0A

Function Block input	Input value
REQ	Enter the input condition to run.
SLV_ADDR	16#11 or 17 : Slave station no.
FUNC	16#04 or 4 : Enter '4' when reading input register.
ADDRH	16#00 or 0 : High byte among the address starting to read from the Slave station.
ADDRL	16#08 or 8 : Low byte among the address starting to read from the Slave station. - In order to read from input register 30009, it is required to read **from no.8** according to the 8) modbus addressing regulation. And most significant data of data address shall be processed internally automatically by the input value of *Function Block* input FUNC without separate input.
NUMH	16#00 or 0 : High byte when expressing total size of data to read by Hexa

NUML	16#01 or 1	: Low byte when expressing total size of data to read by Hexa. - From the example, it is required to read 30009 and total size of data shall be 1. If expressing 1 by Hexa, it shall be H0001 and it is required to enter H00 for NUMH and H01 for NUML.

- Results

Variable name	Storage value
RD_DW1[0]	H000A or 10
RD_DW1[1]	X

- The variable to save the read data should be array type variable and the size of array type variable should be equal to or greater than that of the data to read. If it is smaller, error code shall be indicated on the STATUS.
- The read data shall be saved from array variable RD_DW1[0].
- The remaining part after filling the array variable by the read data shall be redundancy.

3) MOD0506

Function Block	Description
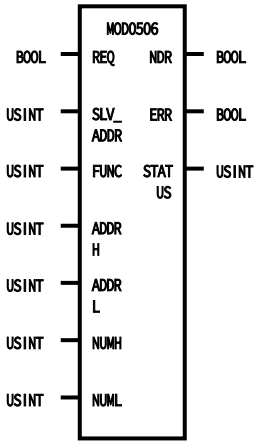	**Input** REQ : When 1(rising edge), *Function Block* execution SLV_ADDR : Slave station address input FUNC : Function code input It supports function code 05 and 06. ADDRH : High address among start address to write in the Slave station. ADDRL : Low address among start address to write in the Slave station. NUMH : High address among data to write in the Slave station. NUML : Low address among data to write in the Slave station. **Output** NDR : If executing without error, output 1 and maintain 1 until calling next *Function Block*. ERR : When error occurs, output 1 and maintain 1 until calling next *Function Block*. STATUS : When error occurs, output the error code.

(1) Function

This is the *Function Block* to execute by selecting function code 05 and 06 from modbus protocol communication and used for 1Bit Write (function code 05) and 1Word Write (function code 06). Function code 05 performs 1Bit data Write for output contact (Coil) and if setting 255 (or HFF) for input NUMH of *Function Block* or 0 (or H00) for input NUML, write ‘1’ for output contact and if setting 0 (or H00) for input NUMH or 0 (or H00) for NUML, write ‘0’ for output contact. Function code 06 performs 1 word data write in output register.

(2) Error

Output the error code to the output STATUS. Further information, please refer to Error code.

(3) Program Example

① This is the example when GM7 basic unit is the Master and when writing 1 bit data to the output contact of Modicon product that is station no.17.

- Write '1' to the output contact (Coil) 00173 of the Slave station (station no.17)

Function Block input	Input value
REQ	Enter the input condition to run.
SLV_ADDR	16#11 or 17 : Slave station no.
FUNC	16#05 or 5 : Enter '5' when writing 1 Bit to output contact.
ADDRH	16#00 or 0 : High byte among the address starting to write in the Slave station.
ADDRL	16#AC or 172 : Low byte among the address starting to write in the Slave station. - In order to write to output contact 00173, it is required to write **from No.172** according to the 8) modbus addressing regulation. And most significant data of data address shall be processed internally automatically by the input value of *Function Block* input FUNC without separate input.
NUMH	16#FF or 255 : Data to write in the Slave station - '0' → H00 - '1' → HFF
NUML	16#00 or 0 : Data to write in the Slave station - From the example, it is required to write '1'. Thus, enter HFF for HUMH and H00 for NUML.

- Results : Output contact 00173 shall be ON. (In case of GM7 basic unit, '1' shall be saved in the corresponding M area.)

Output contact	00173
Contact status	1

② This is the example when GM7 basic unit is the Master and when writing 1Word Data to the output register of Modicon product that is station no.17.

- This is the example to write '3' to the output register (Holidng Registers) 40002 of the Slave station (Station no.17).

Function Block input	Input value
REQ	Enter the input condition to run.
SLV_ADDR	16#11 or 17 : Slave station no.
FUNC	16#06 or 6 : Enter ‘6’ when writing 1Word to output register.
ADDRH	16#00 or 0 : High byte among the address starting to write in the Slave station.
ADDRL	16#01 or 1 : Low byte among the address starting to write in the Slave station. - In order to write to output contact 40002, it is required to write **from No.1** according to the 8) modbus addressing regulation. And most significant data of data address shall be processed internally automatically by the input value of *Function Block* input FUNC without separate input.
NUMH	16#00 or 0 : High byte when expressing the data to write in the Slave station by Hexa.
NUML	16#03 or 3 : Low byte when expressing the data to write in the Slave station by Hexa. - From the example, it is required to write ‘3’ and if expressing the data by Hexa, it shall be H0003 and it is required to enter H00 for HUMH and H03 for NUML.

- Results : H0003 shall be saved in output register 40002. (In case of GM7 basic unit, H0003 shall be saved in the corresponding M area.)

Output register	40002
Register status	H0003

4) MOD1516

Function Block	Description
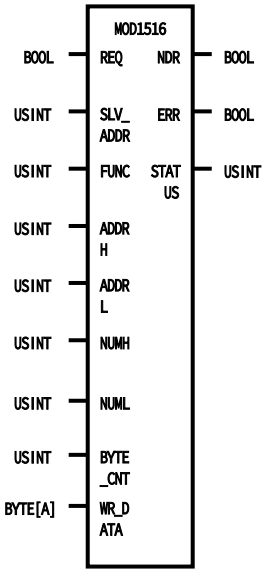	**Input** REQ : When 1(rising edge), *Function Block* execution SLV_ADDR : Slave station address input FUNC : Function code input It supports function code 15 and 16. ADDRH : High address among starting address to write in the Slave station. ADDRL : Low address among starting address to write in the Slave station. NUMH : High address of data size to write in the Slave station. NUML : Low address of data size to write in the Slave station. BYTE_CNT : Byte size of data to write in the Slave station. WR_DATA : Variable name to save the data to write. (It should be declared as equal to or greater than the data size.) **Output** NDR : If executing without error, output 1 and maintain 1 until calling next *Function Block*. ERR : When error occurs, output 1 and maintain 1 until calling next *Function Block*. STATUS : When error occurs, output the error code.

(3) Function

This is the *Function Block* to execute by selecting function code 15 and 16 from modbus protocol communication and used for Continuous 1Bit Write (function code 15) and Continuous 1Word Write (function code 16). Function code 15 performs 1Bit Data Write for output contact (Coil) by 1 byte continuously and Function code 16 performs 1 Word Data Write for output register (Holding Registers) continuously.

(4) Error

Output the error code to the output STATUS. For further information, please refer to Error Code.

(5) Program Example

① This is the example when GM7 basic unit is the Master and when writing Bit Data continuously to output contact of Modicon product that is station no.17.

- It writes the continued 10bit 0111001101 to output contact (Coil) 00020 in the Slave station (Station no.17) by 1bit. The data to write is saved in BYTE type random array variable WR_DB0 whose size is 2.

Variable name	Storage value
WR_DB0[0]	2#11001101 or 16#CD
WR_DB0[1]	2#10000001 or 16#81

- The size of BYTE_CNT is the size when converting the data to write by byte unit. As the above data is 10bit, 1byte is not enough to contain the data and 2bytes are required. It shall be filled with from low bit and the high 6 bit shall be filled with ‘0’. Thus, the size of BYTE_CNT is 2.
- If assuming that the data of 1000 0001 1100 1101 is saved in array variable WR_DB0, the data shall be transmitted by filling the high 6bit with ‘0’ from low 10 bit (01 1100 1101). As the size of data to transmit is designated by 10bit, it is required to take the low 10 bit and fill the remaining bit with ‘0’ as it is transmitted by byte unit.
- The data shall be transmitted by byte unit from low bit. The transmission of the above data is shown on Ex.1).

  Ex.1) CD 01

Function Block input	Input value
REQ	Enter the input condition to run.
SLV_ADDR	16#11 or 17 : Slave station no.
FUNC	16#0F or 15 : Enter '15' when writing Bit to output contact continuously.
ADDRH	16#00 or 0 : High byte among starting address to write in the Slave station.
ADDRL	16#13 or 19 : Low byte among starting address to write in the Slave station. - In order to write from output contact 00020, it is required to write **from No.19** according to the 8) modbus addressing regulation. And most significant data of data address shall be processed internally automatically by the input value of *Function Block* input FUNC without separate input.
NUMH	16#00 or 0 : High byte when expressing total size of data to write in the Slave station by Hexa.
NUML	16#0A or 10 : Low byte when expressing total size of data to write in the Slave station by Hexa. - From the example, it is the 10 bit data continued from 00020 and total size shall be 10. If expressing 10 by Hexa, it shall be H000A and it is required to enter H00 for NUMH and H0A for NUML.
BYTE_CNT	16#02 or 2 : This is the size when converting total size of data to write in the Slave station by byte unit. - From the example, it is the continued 10 bit data and if converted by byte unit, it shall be 2 byte. Thus, it is required to enter H02 for BYTE_CNT.

- Results
  The low 10 bit only is effective as much as the setting data size among 2byte (16bit) data.

Output contact	00029	00028	00027	00026	00025	00024	00023	00022	00021	00020
Contact status	0	1	1	1	0	0	1	1	0	1

② This is the example when GM7 basic unit is the Master and when writing Word Data continuously to output register of Modicon product that is station no.17.

- It writes 000A and 0102 to output register (Holding Registers) 40002 in the Slave station (station no.17). The data to write is saved in BYTE type array variable WR_DB1 whose size is 4.

Variable name	Storage value
WR_DB1[0]	2#00001010 or 16#0A
WR_DB1[1]	2#00000000 or 16#00
WR_DB1[2]	2#00000010 or 16#02
WR_DB1[3]	2#00000001 or 16#01

- The size of BYTE_CNT is the size when converting the data to write by byte unit. As the above data is 2 words, it is required to use 4 bytes. Thus, the size of BYTE_CNT is 4.
- The data is transmitted from low word by byte unit. The transmission of the above data is shown on Ex.1).

  Ex.1) 00 0A 01 02

Function Block input	Input value
REQ	Enter the input condition to run.
SLV_ADDR	16#11 or 17 : Slave station no.
FUNC	16#10 or 16 : Enter '16' when writing Word to output register continuously.
ADDRH	16#00 or 0 : High byte among starting address to write in the Slave station.
ADDRL	16#01 or 1 : Low byte among starting address to write in the Slave station. - In order to write from output register 40002, it is required to write **from No.1** according to the 8) modbus addressing regulation. And most significant data of data address shall be processed internally automatically by the input value of *Function Block* input FUNC without separate input.
NUMH	16#00 or 0 : High byte when expressing total size of data to write in the Slave station by Hexa.
NUML	16#02 or 2 : Low byte when expressing total size of data to write in the Slave station by Hexa. - From the example, it is the 2word data continued from 40002 and total size shall be 2. If expressing 2 by Hexa, it shall be H0002 and it is required to enter H00 for NUMH and H02 for NUML.

BYTE_CNT	16#04 or 4	: This is the size when converting total size of data to write in Slave station by byte unit. - From the example, it is the continued 2word data and if converted by byte unit, it shall be 4 byte. Thus, it is required to enter H04 for BYTE_CNT.

- Results

Output register	40003	40002
Register status	H0102	H000A

5) Error code

CODE	Error type	Meaning
01	Illegal Function	Function code input error to the *Function Block*
02	Illegal Address	The area to read/write in the slave exceeds the allowed range.
03	Illegal Data Value	The data value to read/write in the Slave is not allowed.
04	Slave Device Failure	Slave error status
05	Acknowledge	This is a kind of response code that the Slave sends to the master to prevent the time of the master when it takes a time for the processing of demand command. In the master, it indicates the error code and wait for the regular time without demanding again.
06	Slave Device Busy	The error caused by long processing time of the slave. Master must demand again.
07	Time Out	The error occurred when exceeding the setting time of the communication parameter while communication.
08	Number Error	The error occurred when data is ‘0’ or more than 256byte, when data size is greater than array size, and when number and BYTE_CNT is different.
09	Parameter Error	Parameter setting error (mode, master/slave)
10	Station Error	The error occurred when the station no. set in self station and input parameter of function is the same.

8.4.2 MASTER-K Series

1) Command Modbus

Command		Available area to use												Step no.	Flag		
		M	P	K		L	F	T	C	S	D	#D	Integral number		Error (F110)	Zero (F111)	Carry (F112)
Modbus	S1	0	0	0	0	0	0	0	0		0	0		7	0		
	S2	0	0	0	0	0		0	0		0	0					
	S3	0	0	0	0	0		0	0		0	0					

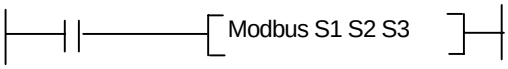

Flag	
F110	When exceeding #D area, it shall be ON.
Area setting	
S1	Device address to register sending/receiving parameter.
S2	Device address to save sending/receiving data.
S3	Device address to indicate sending/receiving status.

(1) Function

- This transmits the data saved in the S1 device to Modbus protocol through communication port. (3Word)
- This designates the leading address of the device where the received data is saved to S2.
  - ➔ According to function of S1, it designates the leading address of the device that the received data is saved when receiving and the leading address of the data to sending when sending.
- The communication action status is saved in S3.

(2) Program Example

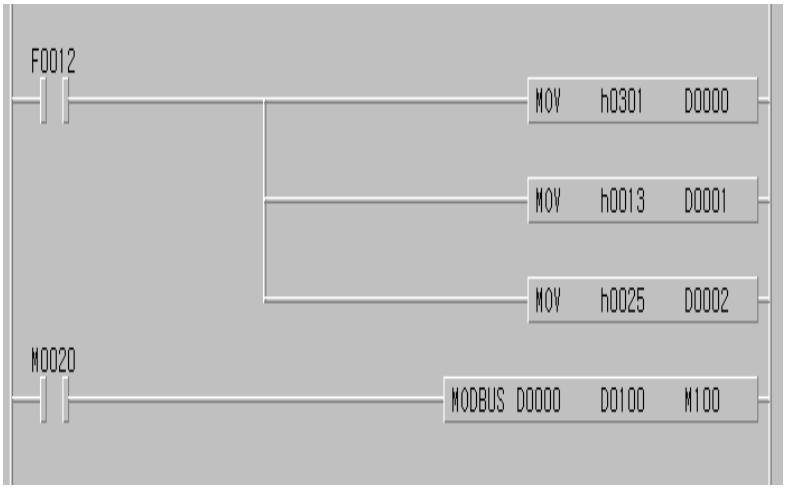

Designate the slave address (high byte) and function code (low byte).

Designate the address.

Designate the number to read.

When **M0020** is **ON**, open the Modbus communication with **Modbus** parameter saved in **D0000** and save the data received in **D1000**.
The communication error information is saved In **M100**.

If the parameter Modbus is set as the Slave, it will respond when required by the master without separate command and if setting as the master, the designated data shall be transmitted to Modbus protocol designated as S1 whenever the input condition of Modbus command is ON.

- S3 format is as follows.

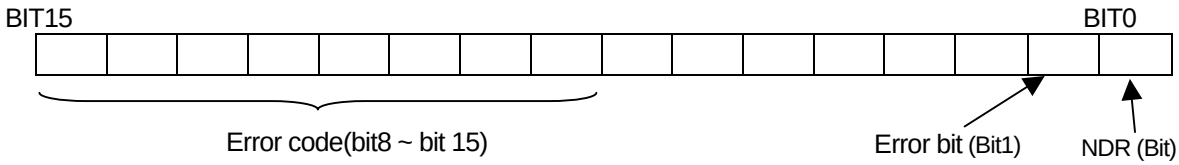

- NDR : when completing the normal communiction, 1Scan ON.
- Error bit : when communication error occurs, 1Scan ON and in this case, error code is indicated Bit8 ~ Bit15.
- Error code : when error occurs, it shows the information for the error. (refer to the error code table as below.)

Error code table

Code	Name	Description
01	Illegal Function	Function code error
02	Illegal Address	Address allowed range exceeded
03	Illegal Data Value	The error that data value is not allowed.
04	Slave Device Failure	Slave error status
05	Acknowledge	When it takes a time for the processing of demand command, the slave sends to prevent time out of the master.
06	Slave Device Busy	The slave takes a time for the processing. The master must demand again.
07	Time Out	When no response during Time out of communication parameter.
08	Number Error	When data number is ‘0’ or exceeds 256Byte.
09	Parameter Error	When the items set in the parameter (such as transmission mode etc.) are wrong.
10	Station Error	When self station no. and input parameter of Modbus command is the same.

8.5 Program Example

8.5.1 GLOFA-GM Series

8.5.1.1 when the Master is GM3/4/6

1) Set the basic frame in Cnet module of Master PLC.

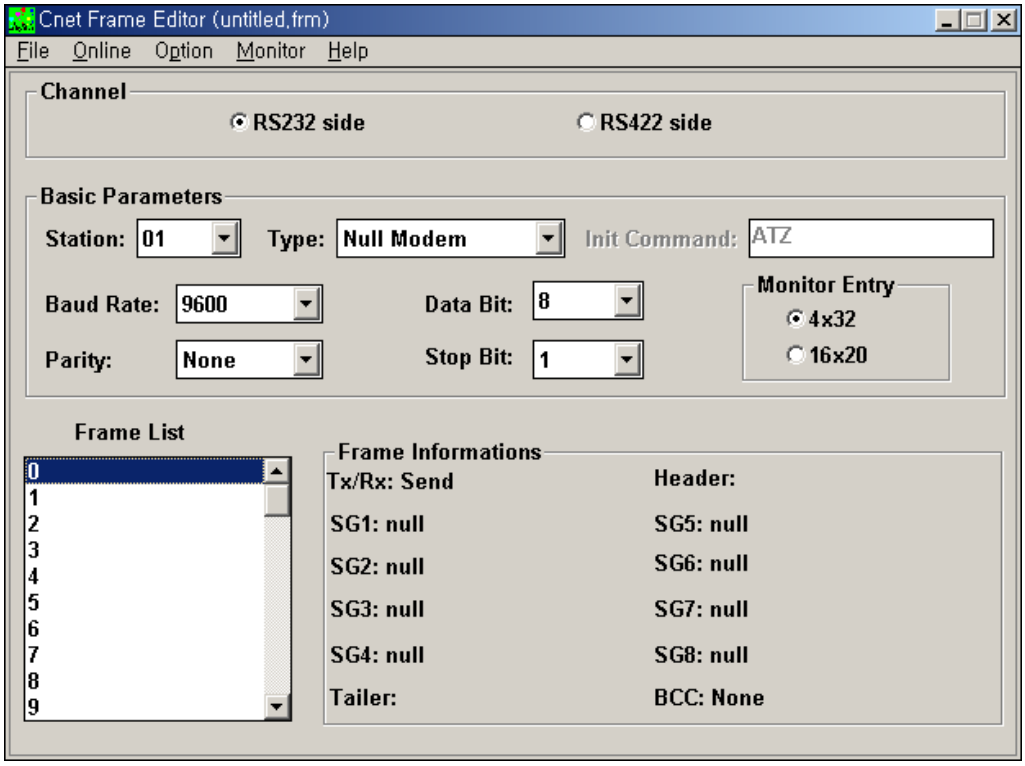

- Basic parameter (Baudrate, Parity, Data bit, Stop bit) is required to correspond with the setting content of other station.
- It is not necessary to write the frame list.

2) Insert Programming-Library

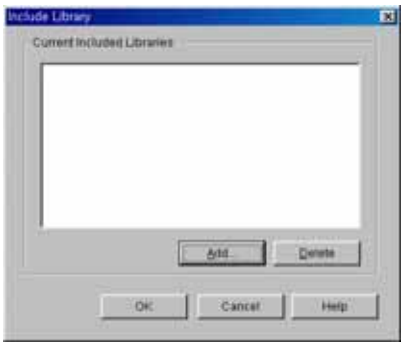

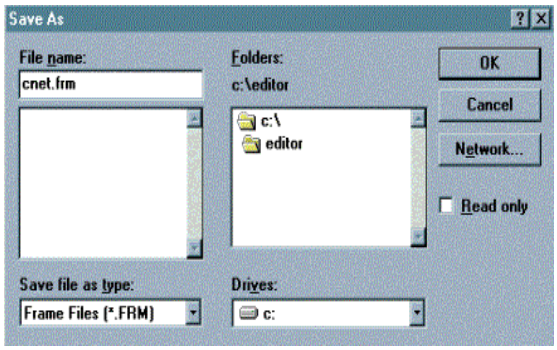

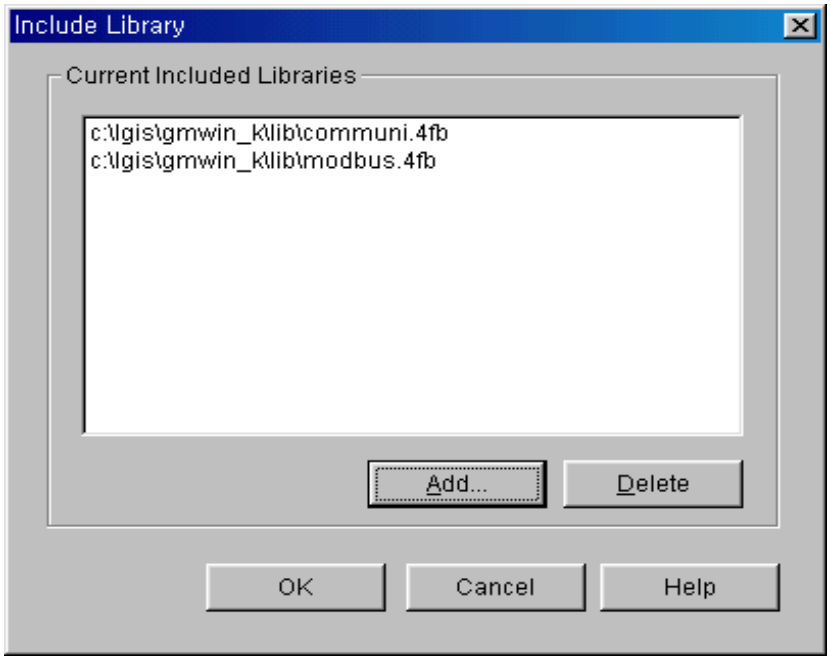

3) Load the *Function Block* from Scan program of GMWIN program and program it.

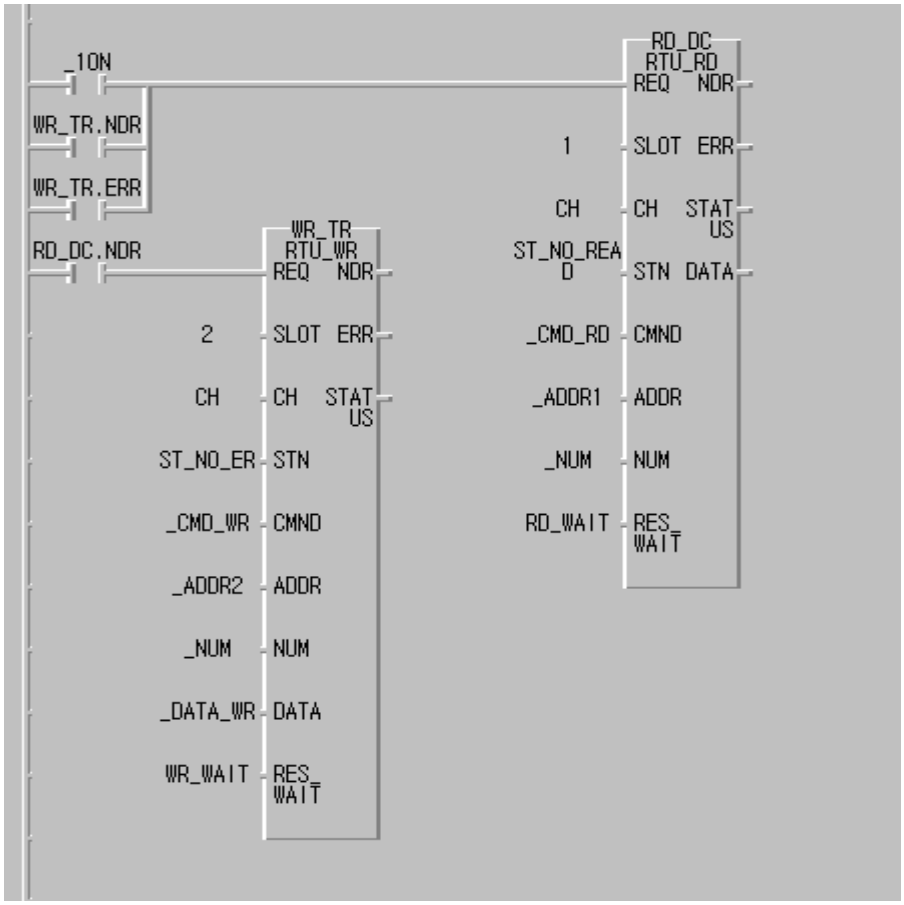

8.5.1.2 When the Master is GM7

- Slave station program : output the receiving data saved in M area to the output contact (Coil).
- Master station program : After saving 16#FF(OR 255) to %MW0(this corresponds with %MX0 ~ %MX15 or %MB0 ~ %MB1.) in the *Function Block* MOD0506(function code 06), read %MX0 using the *Function Block* MOD0102(function code 01) and save '0' to %MX0 ~ %MX9 using the *Function Block* MOD1516(function code 15) again and then read %MW0 using the *Function Block* MOD0304(function code 03).
- The cable used in this cable is the same as the cable used in 1:1 only protocol communication between self stations.

1) Slave station setting and Program

(1) Create new project file and new program for the Slave station.

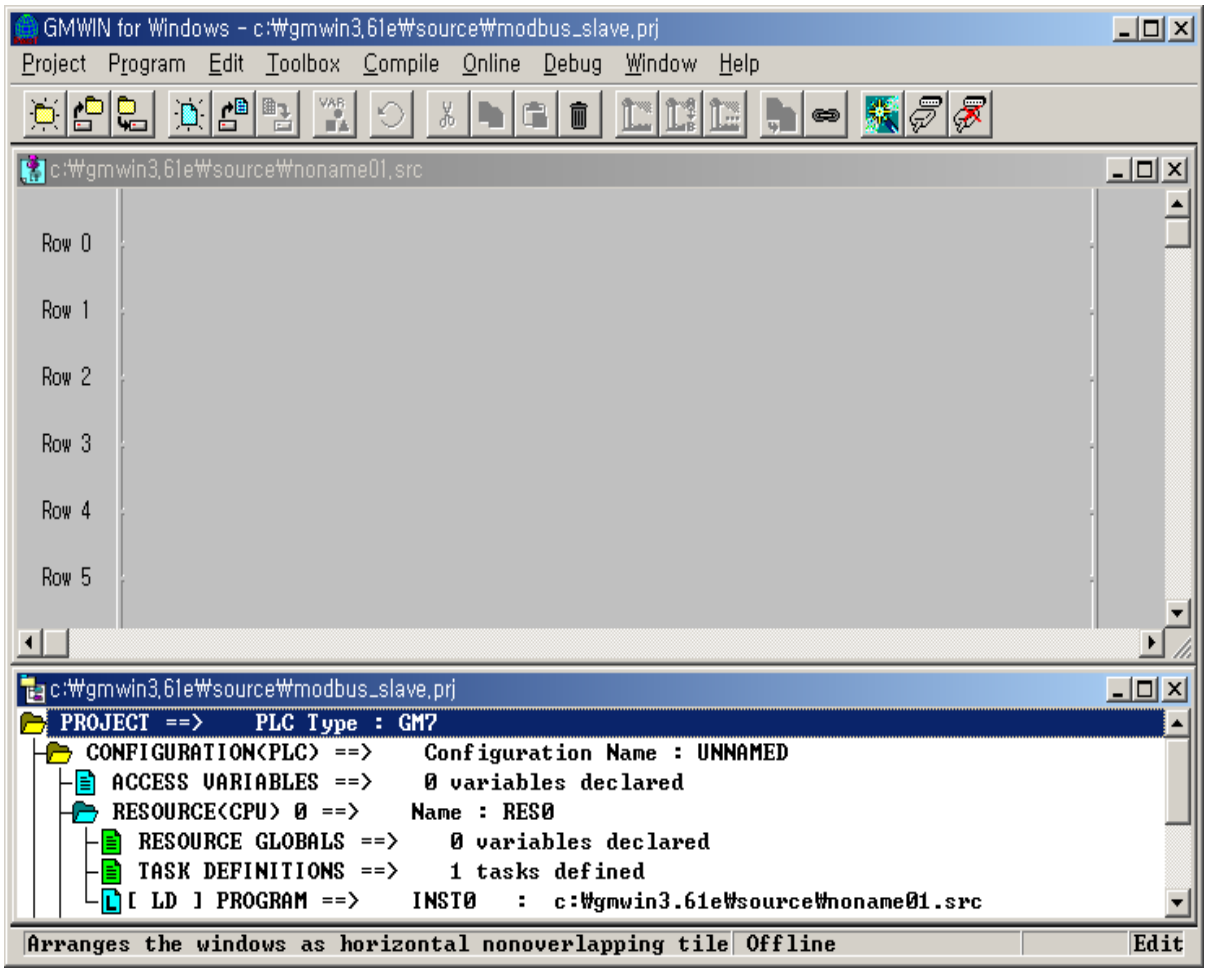

(2) If you select 'communication parameter' from GMWIN parameter and doubleclick, the communication parameter menu window will be open.

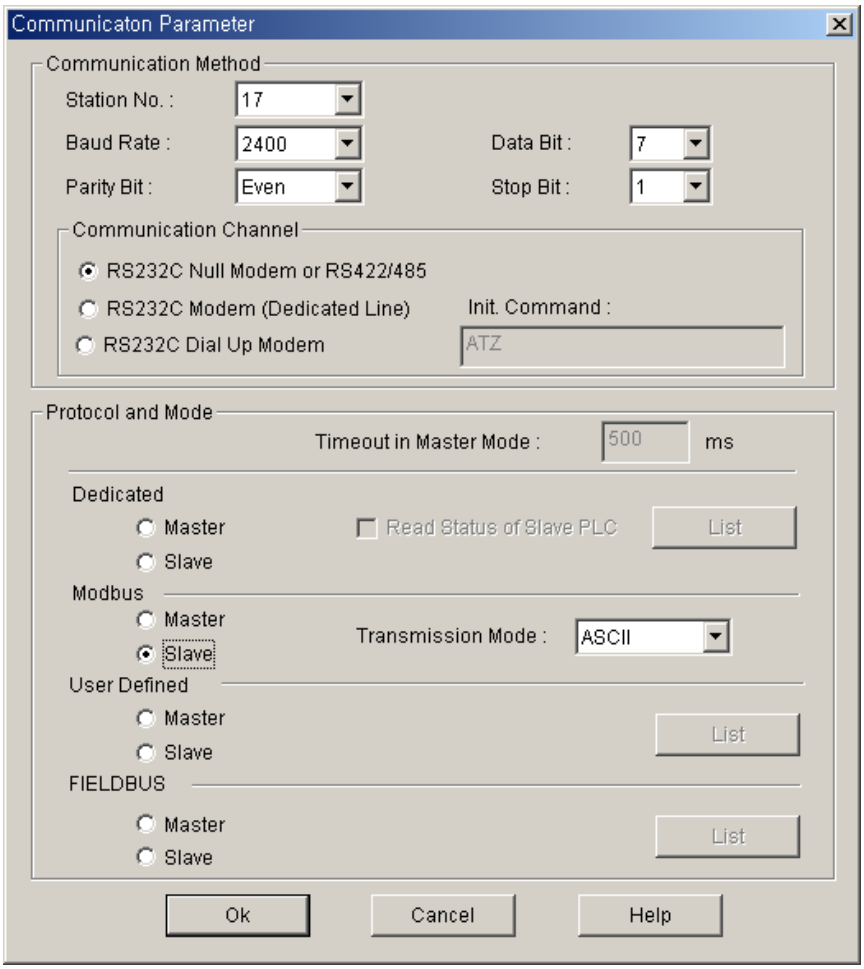

- After setting the parameter as below, press 'verify' button.

Communication method						Protocol and transmission mode	
Self station no.	Communication speed	Data bit	Parity bit	Mainte-nance bit	Communication channel	Modbus	Exclusive mode
17	2400	7	EVEN	1	RS232C null modem or RS422/485	Slave	ASCII

(3) After creating the program as below, download it in the GM7 basic unit of the Slave station. For further program creation and download method, please refer to GMWIN user's manual.

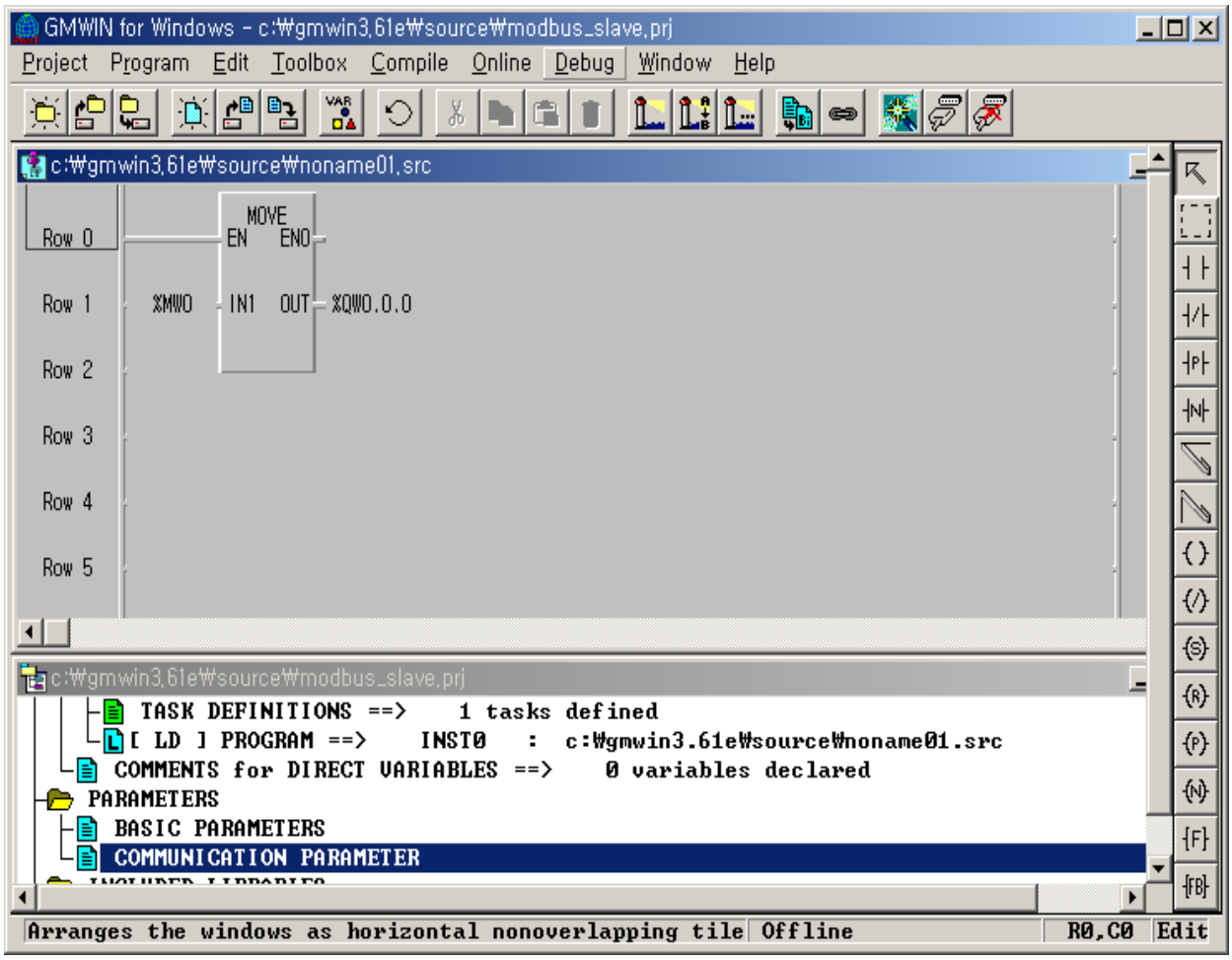

- The slave program is the program to output the data of M area to the output contact.

2) Master Station setting and Program

(1) Create new project file and new program for the Master Station.

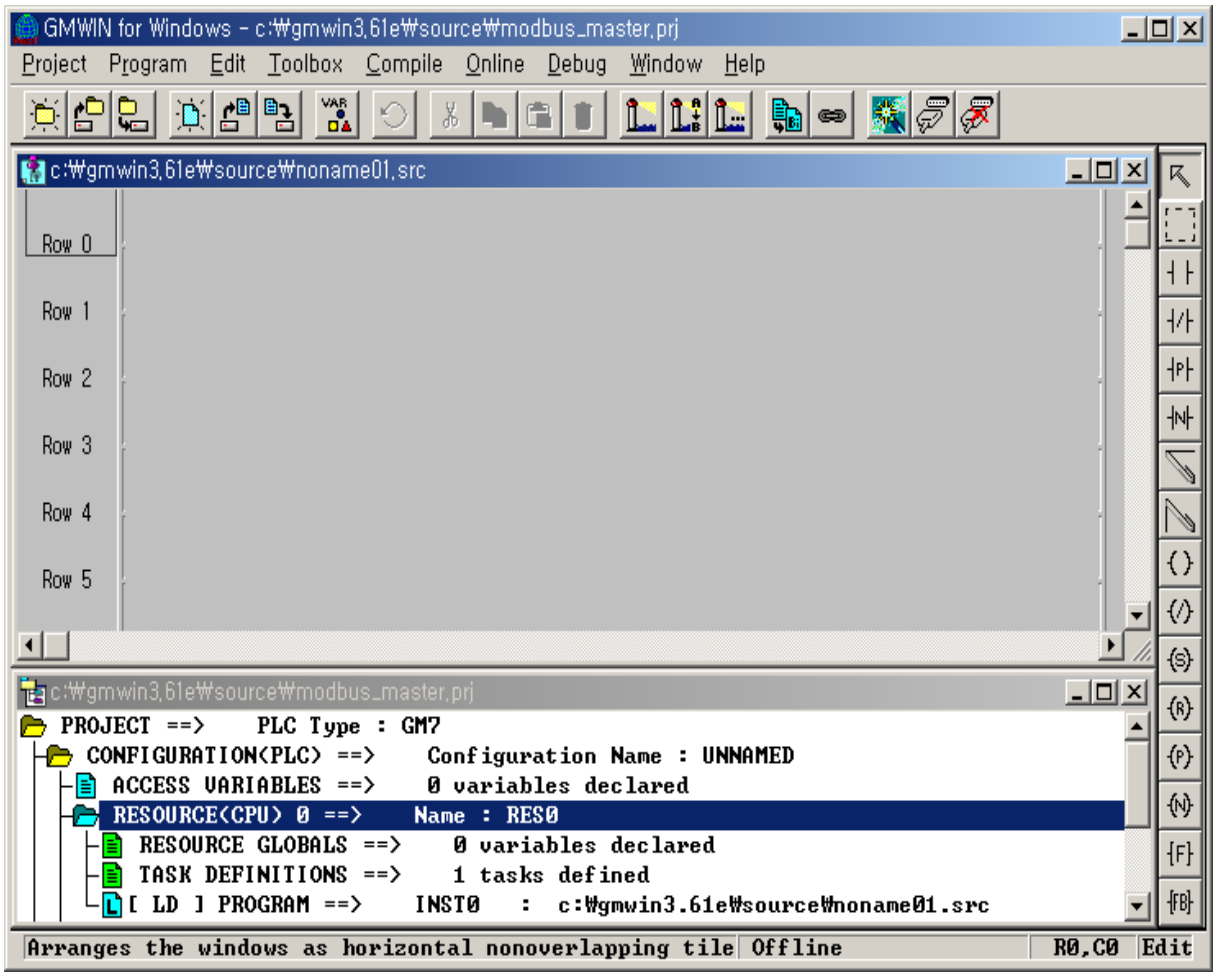

(2) If you select 'communication parameter' from GMWIN parameter and doubleclick, the communication parameter menu window will be open.

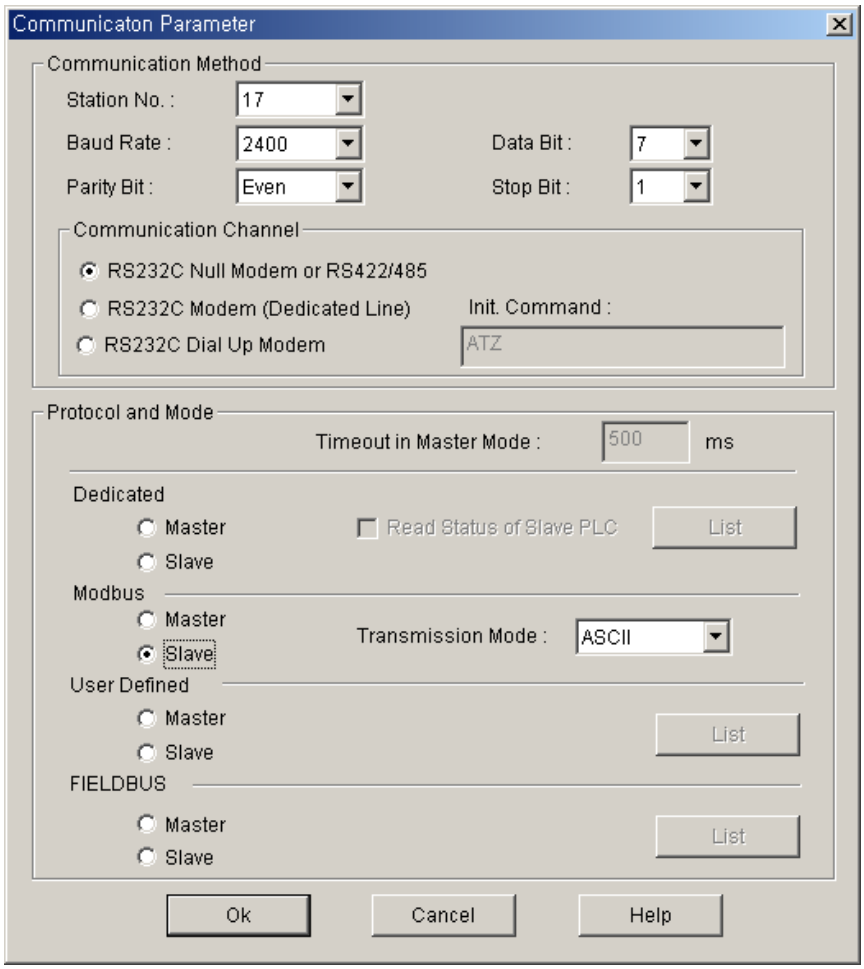

- After setting the parameter as below, press 'verify' button.

Communication method						Protocol & transmission mode	
Self station no.	Communication speed	Data bit	Parity bit	Mainte-nance bit	Communication channel	Modbus	Exclusive mode
1	2400	7	EVEN	1	RS232C null modem or RS422/485	Master	ASCII

(3) After creating the program as below, download it in the GM7 basic unit of the Master station. For further program creation and download method, please refer to GMWIN user's manual.

- In the program, the *Function Block* is used. If you doubleclick GMWIN 'inserted library files' items before using the *Function Block*, the library insert window will be open as below. Press 'Add (A)…' button and add COMM.7FB library and then press 'verify' button.

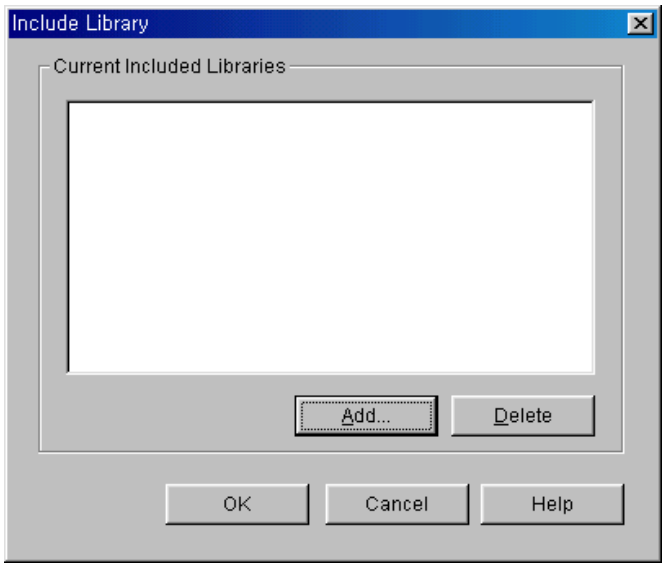

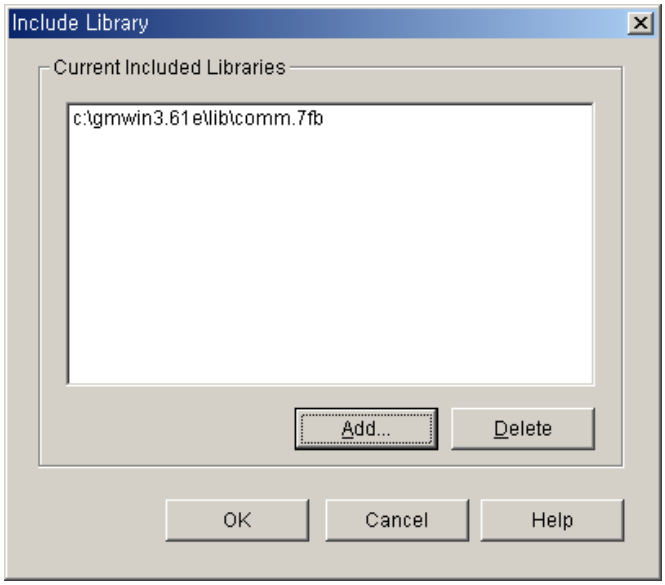

- Program Creation

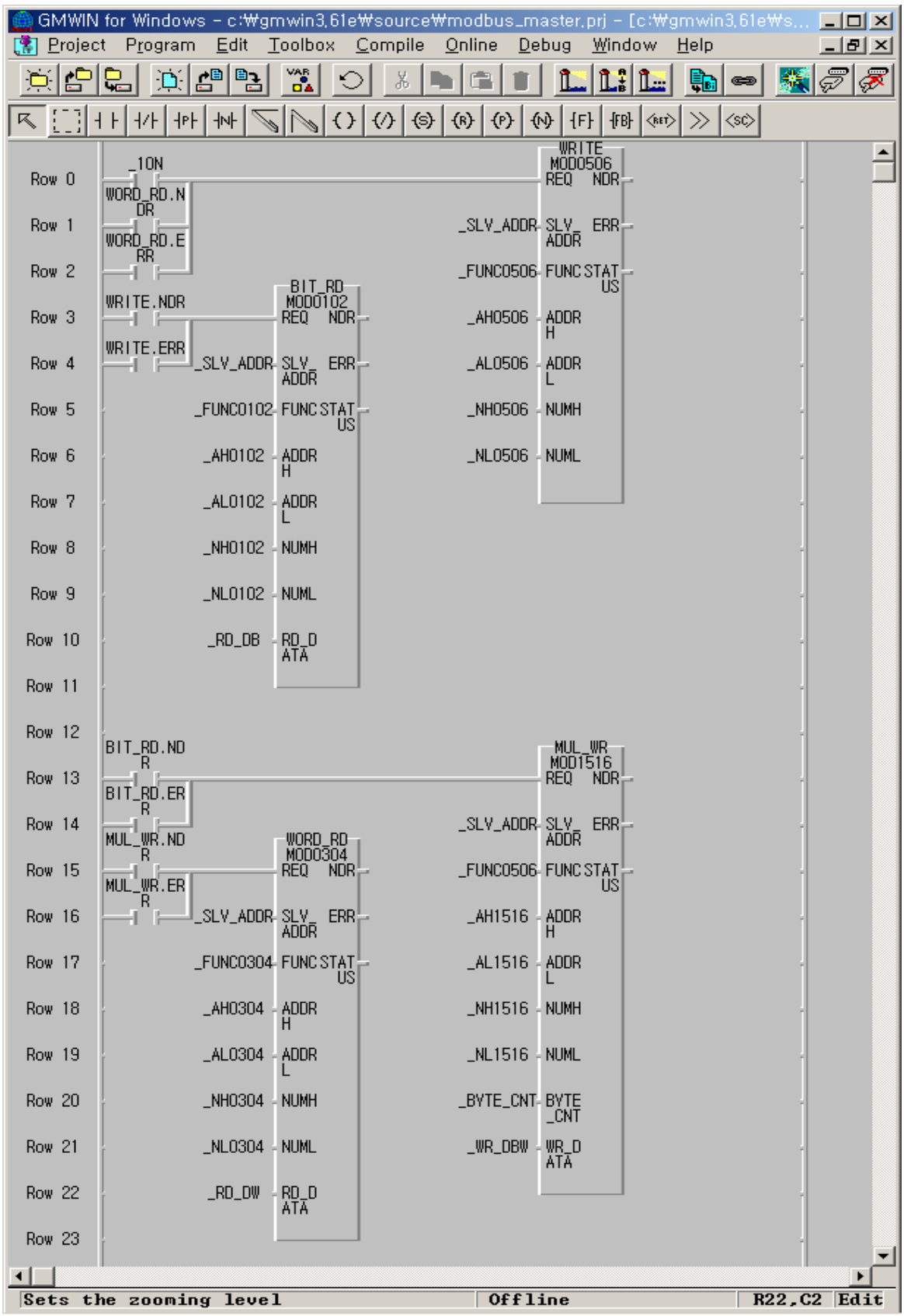

- After saving 16#FF(OR 255) to %MW0(this corresponds with %MX0 ~ %MX15 or %MB0 ~ %MB1.) in the *Function Block* MOD0506(function code 06), read %MX0 using the *Function Block* MOD0102(function code 01) and save '0' to %MX0 ~ %MX9 using the *Function Block* MOD1516(function code 15) again and then read %MW0 using the *Function Block* MOD0304(function code 03).
- You can see that 8 LED of output contact continues to repeat ON/OFF.
- The above figure is the screen that monitored the program execution. Thus, the value to be indicated on Array variable _RD_DB, _RD_DW is the result value after executing 'Read' not the initial value.
- The variable such as instance name.NDR, instance name.ERR, instance name.STATUS is generated automatically if declaring the instance variable of the *Function Block*.
- _1ON flag is the flag that will be ON only for 1Scan.
- Each *Function Block* input REQ is each *Function Block* output.
- The size of _BYTE_CNT must be same when converting the data by byte unit.
- If the size of Array variable is smaller than that of the data to read or writ, the error occurs.

- Variable table

Variable name	Variable type	Initial value	Variable name	Variable type	Initial value
_SLV_ADDR	USINT	17(H11)	_NH0102	USINT	0(H00)
_FUNC0102	USINT	1(H01)	_NH0304	USINT	0(H00)
_FUNC0304	USINT	3(H03)	_NH0506	USINT	0(H00)
_FUNC0506	USINT	6(H06)	_NH1516	USINT	0(H00)
_FUNC1516	USINT	15(H0F)	_NL0102	USINT	1(H01)
_AH0102	USINT	0(H00)	_NL0304	USINT	255(HFF)
_AH0304	USINT	0(H00)	_NL0506	USINT	1(H01)
_AH0506	USINT	0(H00)	_NL1516	USINT	10(H0A)
_AH1516	USINT	0(H00)	_RD_DB	BOOL type ARRAY[40]	{0,0,…,0}
_AL0102	USINT	0(H00)	_RD_DW	WORD type ARRAY[4]	{0,0,0,0}
_AL0304	USINT	0(H00)	_WR_DBW	BYTE type ARRAY[4]	{0,0,0,0}
_AL0506	USINT	0(H00)	_BYTE_CNT	USINT	2(H02)
_AL1516	USINT	0(H00)			

8.5.2 MASTER-K Series

Program Example 1

- This is the example to execute 'Status Read' for output contact (Coil) 00020 ~ 00051 of the Slave station that is station no.17.
- If assuming that the output contact of the Slave station is as below, the read data shall be saved in the data register D1000.

Output contact	51	50	49	48	47	46	45	44	43	42	41	40	39	38	37	36
Contact status	0	0	0	0	1	1	1	0	1	0	1	1	0	0	1	0
Hexa	0				E				B				2			
Output contact	35	34	33	32	31	30	29	28	27	26	25	24	23	22	21	20
Contact status	0	1	1	0	1	0	1	1	1	1	0	0	1	1	0	1
Hexa	2				6				B				C			

1) The data is transmitted from low bit by byte unit. The insufficient bit part among byte shall be filled with '0'. The transmission of the above data is shown on Ex.1).
   Ex.1) CD 6B B2 0E

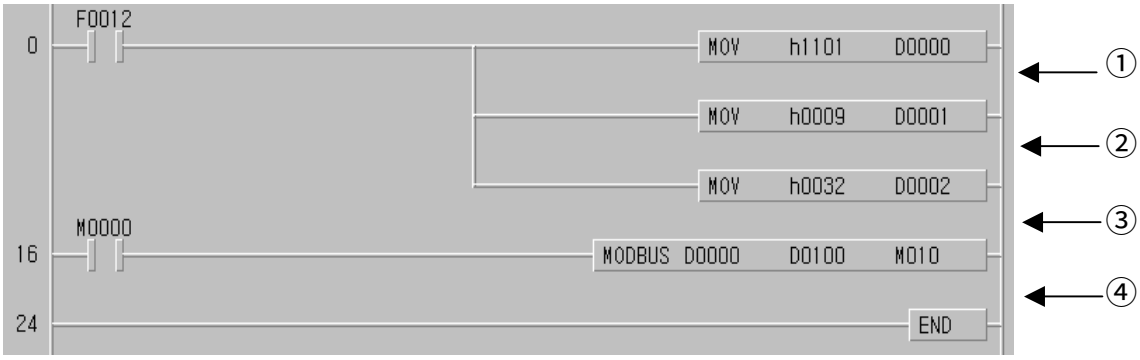

① Set the Slave station no. and Function code.
   Station no.17 = h11 Function code = h01
② Set the address.
   The address '0' set in Modbus protocol means the actual Address 1.
   If setting the actual Address 20, it is required to set Address 19.
③ Set the number.
   The number from Address 20 ~ 51 is 32.
④ Modbus communication command.
   The data to communicate by the setting form D000 ~ D002 is set to save from D1000.

The data is transmitted from low bit by byte unit. The insufficient bit part among byte shall be filled with ‘0’. The transmission of the above data is shown on Ex.1).

Ex.1) CD 6B B2 0E

Storage Data

Device	Storage value
D1000	h CD 6B
D1001	h B2 0E

Program Example 2

This is the example to execute 'Status Read' for input contact (Input) 10197 ~ 10218 of the Slave station that is station no.17.
If assuming that the input contact of the Slave station is as below, the read data shall be saved in the internal Relay M15.

Input contact	10220	10219	10218	10217	10216	10215	10214	10213	10212	10211	10210	10209
Contact status	X	X	1	1	0	1	0	1	1	1	0	1
Hexa	3				5				D			
Input contact	10208	10207	10206	10205	10204	10203	10202	10201	10200	10199	10198	10197
Contact status	1	0	1	1	1	0	1	0	1	1	0	0
Hexa	B				A				C			

1) The status of input contact 10219, 10220 is Redundancy.
2) The data is transmitted from low bit by byte unit. The insufficient bit part among byte shall be filled with '0'. The transmission of the above data is shown on Ex.1).

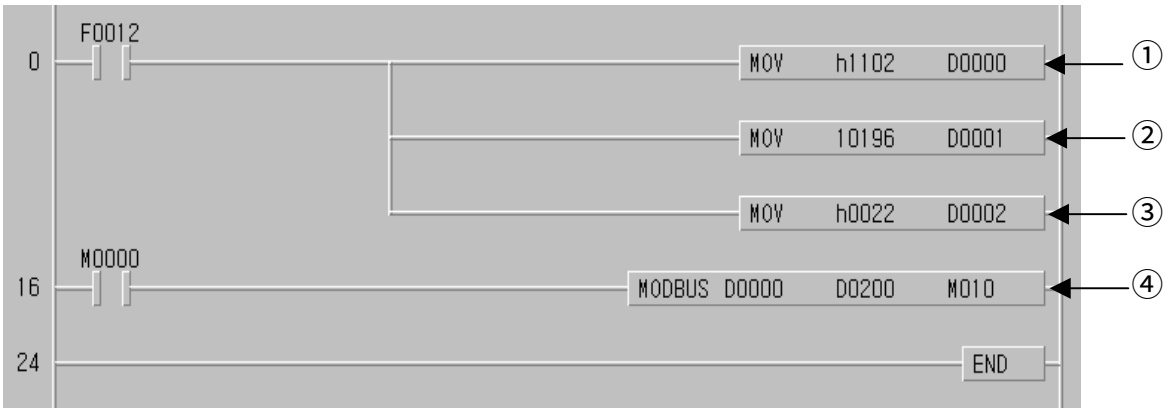

① Set the Slave station no. and function code.
Station no.17 = h11 Function code = h02
② Set the address.
The address '0' set in Modbus protocol means the actual Address 1.
If setting the actual Address 10197, it is required to set Address 10196.
③ Set the number.
The number from Address 10197 ~ 10220 is 22.
④ Modbus communication command.
The data to communicate by the setting form D000 ~ D002 is set to save from D200.

The data is transmitted from low bit by byte unit. The insufficient bit part among byte shall be filled with ‘0’. The transmission of the above data is shown on Ex.2).

Ex.2) AC DB 35

Storage Data

Device	Storage value
D0200/D0201	h AC DB / h 00 35

Chapter 9 Installation and Wiring

9.1 Installation

9.1.1 Installation Environment

This machine has a high reliability regardless of the environment to install. But cares should be taken to secure the reliability and the safety as follows.

1) Environment Condition

(1) Install it to the control panel available for water-proof and dust-proof.
(2) Do not apply the continuous impact or vibration.
(3) Do not expose it directly to the direct rays.
(4) No dew by the sudden change of temperature.
(5) Do not exceed the surrounding temperature 0~55°C.
(6) Do not exceed the relative humidity 5 ~ 95% .
(7) No corrosive gas or combustible gas.

2) Installation Construction

(1) When working the screw hole and the wiring, it is not allowed to put the wire remnants into the PLC.
(2) The installation location should be the place to operate.
(3) Do not install it in the same panel with a high voltage machine.
(4) The distance between wiring duct and the surrounding module should be at least 50mm apart.
(5) The grounding should be done on the good place free from the noise.

3) Radiation Design of Control Panel

(1) When installing the PLC in the sealed control panel, the radiation design should be done considering the radiation of other machine as well as the radiation of PLC itself. When circulating the air using the vent or the general fan, it may effect to the PLC system due to the inflow of gas or dust.

(2) It is recommended to install the filter or use the sealed type thermal exchanger.

9.1.2 Notices in Installing Profibus-DP module

Profibus-DP Smart I/O can set max. 32 stations.

(1) Check the basic factors necessary for the system configuration and select the proper communication module.
(2) Prepare the cable and accessories such as tab, terminal resistance etc. to be used for this communication.
(3) The station no. of all other stations including this module should be different. If connecting with double station no., it may cause the communication error.
(4) In case of operating with normal communication, the mode switch of master module should be RUN mode. If changing the mode switch of master module in the status that other stations are in communication, it may cause the significant communication obstacle with other stations. So, special cares are needed.
(5) For communication cable, the designated standard cable should be used. If not, it may cause the significant communication obstacle.
(6) Check if the communication cable is cut off or short-circuited before installation.
(7) Tighten the communication cable connector completely and fix the cable connection tightly. If cable connection is not complete, it may cause the significant communication obstacle.
(8) If the communication cable is twisted or the cable is not connected properly, it may cause the communication error.
(9) In case of connecting the long distance communication cable, the wiring should be done far from the power line or inductive noise.
(10) If LED action is abnormal, check the trouble causes referring to this manual Chapter 11.'Trouble Shooting". If the problem repeats after taking the action, contact to A/S center.
(11) Install this communication module in the status that PLC power is 'OFF'.
(12) After finishing the communication cable connection, make the power ON and check the normal action in the LED action status. If it is normal, download the corresponding program into GMWIN for GLOFA series and into KGLWIN for MASTER-K series and run the program.
(13) In case that the power of Remote station among communication stations between master module and Smart I/O module is 'OFF' and then 'ON', the remote station enters into the automatic 'Start' if mother station has the initialized program and if no initialized program, the normal start is not available. So it is required to prepare the initialized program in the mother station. (Refer to the communication user's manual.)

9.1.3 Notices in installing DeviceNet module

DeviceNet Smart I/O can set max. 64 stations(included one master module)

(1) Check the basic factors necessary for the system configuration and select the proper communication module.

(2) Prepare the cable and accessories such as tab, terminal resistance etc. to be used for this communication.

(3) It is available to control the speed automatically in accordance with the communication speed of master module by the means of Auto baudrate function and it is required to comply the cable specification.

(4) In case of using the tab, it is required to use terminal resistance on both side of the tab. In case of the single network system, set it not to repeat the station no. Install the master module in the base in the status of PLC power OFF and set the communication address and communication speed accurately.

(5) Check if the connector pin of this communication module is normal and make sure that the power cable and the communication cable are not short-circuited.

(6) If using the combined module (GDL-DT4A) when setting the *high speed link* parameter, the module will occupy 2 registration lists and it is available to register max. 31 (but only GDL-DT4A is installed).

(7) The communication speed to be used for this communication module is 125k,250k,500kbps and if changing the communication speed after setting the communication speed, make the power 'OFF' and change the communication setting switch and then apply the power 'ON'. Then the changed mode shall be applied.

(8) After finishing the communication cable connection, make the power ON and check the normal action in the LED action status. If it is normal, download the corresponding program into GMWIN for GLOFA series and run the program.

1) Materials required in installation

Required material	Dnet I/F module
Communication cable	Thick cable/Thin cable
Tab/terminal resistance	4/8 port tab, terminal resistance:121Ω, 1%, 1/4W
24V power supply device	General power supply
Connection connector	Phoenix) 5 pin Female connector

2) Notices in installing the Connector

The following cares should be taken before installing the connector.

(1) Deal the connector when the signal is not loaded in the cable.

(2) If the module installed in the system is in action, stop the action and then install it.

(3) If the power is supplied, the power should be 'OFF' before working.

(4) After completing the installation, tighten the corresponding cable completely not to be shaken or removed.

3) How to install the connector

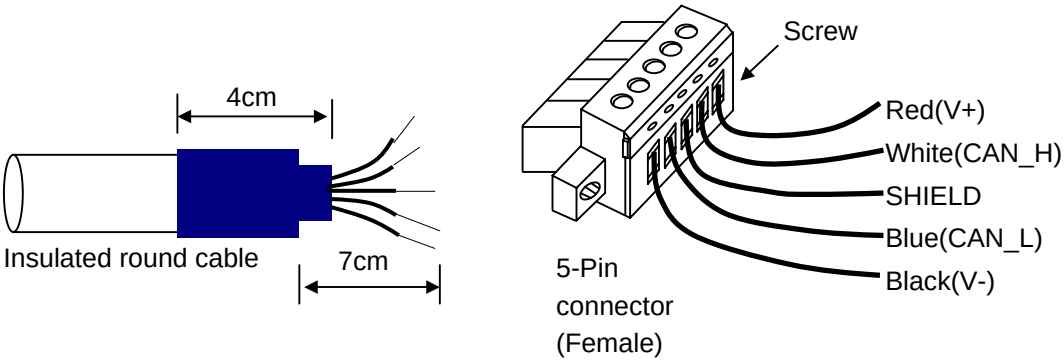

(1) Peel off the cover of the cable apprx. 7cm for cable connection.
(2) Remove the covered net covering the signal cable and remove the aluminum foil covering the signal cable and the power cable.
(3) Cut the shrinkage cover for packing approx. 4cm and rap the cable and then cover the exposed conductor and insulated coverings of the cable.
(4) Peel off the coverings of the signal cable and the power cable approx. 3mm from the ends.
(For the safe cabling, apply the heat to the compressed cover for packing and stick to the cable closely.)

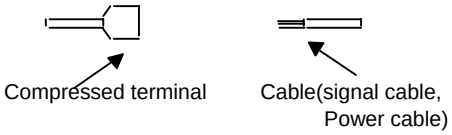

(5) After inserting the peeled coverings into the clamp screw of the connector, tighten the screw. (Cares should be taken to match the cable with the signal name of the connector.)

There are 2 ways of cable connection : one way to use the tab as below and another way to connection by the drop method. DC 24V power should be installed in the place necessary to maintain the voltage when Smart I/O module is getting more or the cable is getting longer.

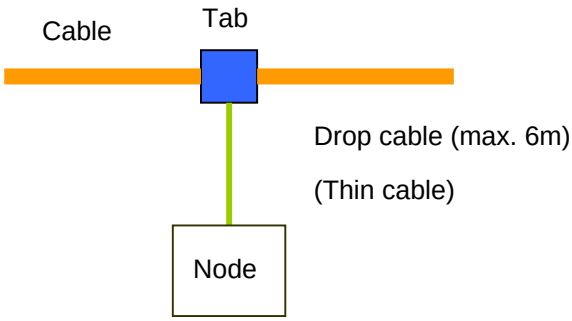

The method to connect the network is as follows.

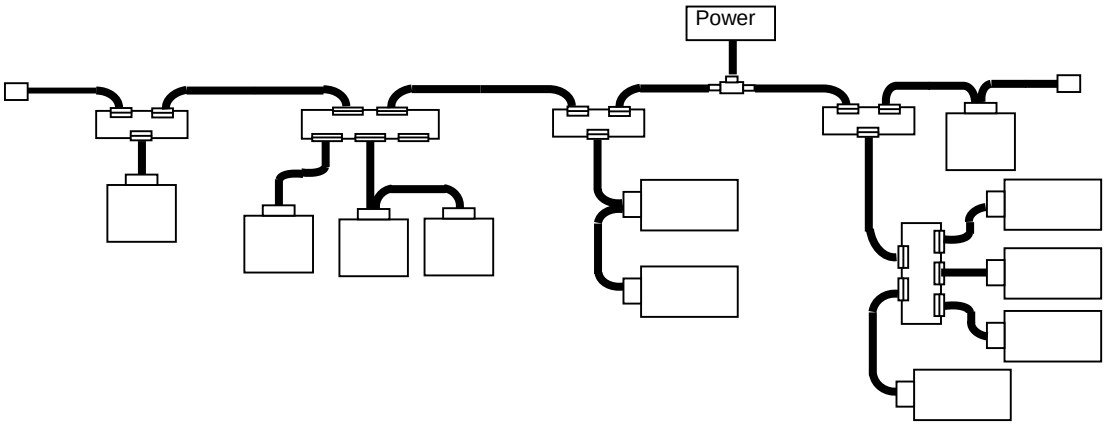

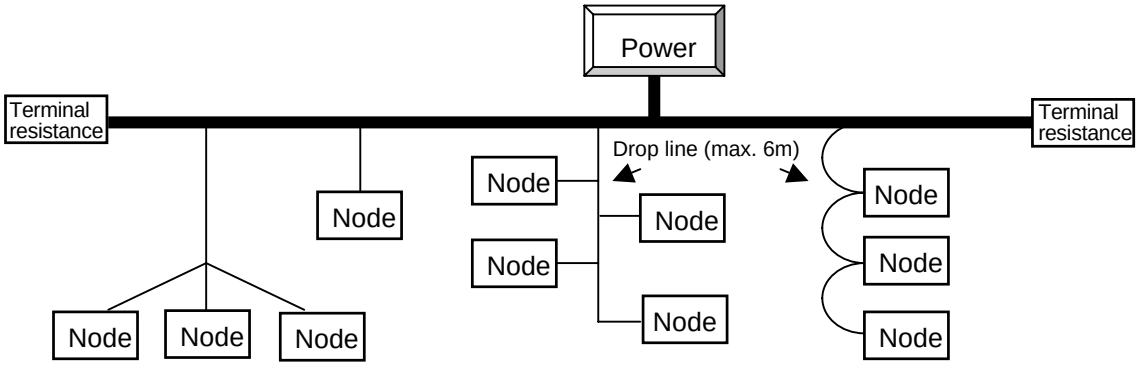

4) How to install the tab (Example of 8-Port tab)

It is available to connect to the trunk line of device port tab and connect or remove max. 8 port tab.

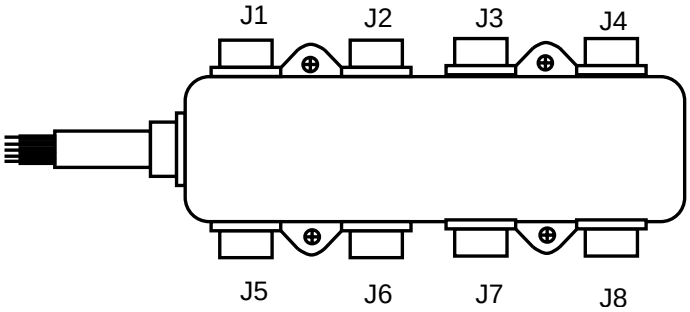

(1) The drop line composed of Thick cable or Thin cable is available to connect to the device by the tab and in case of Open-style tab, it is available to use 3 type of connectors.
- Pluggable screw type
- Hard-wired screw type
- Soldered type

(2) For the cable connection, it is ideal to connect the drop line when the system does not act. If connecting when cable system is acting, it is required to connect to the trunk line after checking the connection status with other device not to influence the communication.

(3) If connecting to the trunk line, it is required not to exceed max. allowable length.

Network max. distance according to the cable type is as follows.

Cable type	Network max. distance
THICK cable	500 m
THIN cable	100 m

Network max. distance according to the communication speed is as follows.

Communication speed	Network max. distance
500 kbps	LTHICK + LTHIN ≤ 100 m
250 kbps	LTHICK + 2.5 ∗ LTHIN ≤ 250 m
125 kbps	LTHICK + 5 * LTHIN ≤ 500 m

LTHICK:THICK cable length (max.8A), LTHIN:THIN cable length(max.3A)

Communication speed	Network max. distance	
	THICK cable length	THIN cable length
500 kbps	Less than 100 m	Less than 100 m
250 kbps	Less than 250 m	
125 kbps	Less than 500 m	

If the communication speed is 500kbps, the length of branch line is less than 6m and total distance of branch line is less than 39m. And if the communication sped is 250kbps, the length of branch line is less than 6m and total distance of branch line is less than 78m and if the communication speed is 125kbps, the distance of branch line is less than 6m and total distance of branch line is less than 156m respectively.

5) Power Layout

The layout of the power is as follows.

(1) In case of arranging the node on both side of the power,

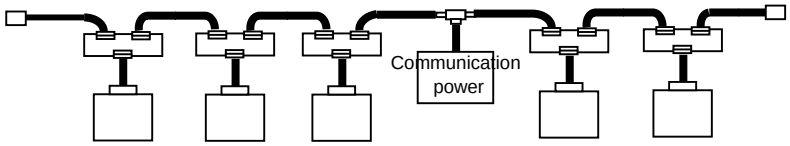

(2) In case of arranging the node on one side,

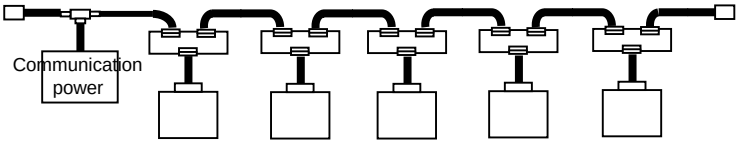

(3) In case of installing the double power and dividing the power supply system,

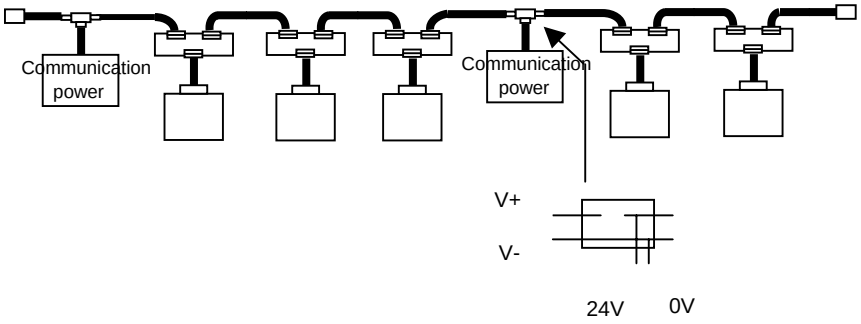

(4) In case of duplication of the power

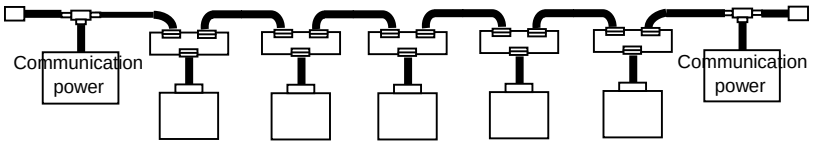

The distance between the power and the power tab shall be within 3m.

9.1.4 Notices in installing Rnet module

Rnet Smart I/O can set max. 64 stations(included one master module).

1) The station no. of all other stations including this module should be different. If connecting with double station no., it may cause the communication error.
2) In case of operating with normal communication, the mode switch of master module should be RUN mode. If changing the mode switch of master module in the status that other stations are in communication, it may cause the significant communication obstacle with other stations. So, special cares are needed.
3) For communication cable, the designated standard cable should be used. If not, it may cause the significant communication obstacle.
4) Check if the communication cable is cut off or short-circuited before installation.
5) Tighten the communication cable connector completely and fix the cable connection tightly. If cable connection is not complete, it may cause the significant communication obstacle.
6) If the communication cable is twisted or the cable is not connected properly, it may cause the communication error.
7) If using the combined module (GRL-DT4A) when setting *high speed link* parameter, the module will occupy 2 registration lists and it is available to register max. 31 (but only GRL-DT4A is installed).
8) In case of connecting the long distance communication cable, the wiring should be done far from the power line or inductive noise.
9) The (twisted pair) shielded cable of communication cable should be connected with the body of 9 Pin connector on both side.
10) If LED action is abnormal, check the trouble causes referring to this manual Chapter 11.'Trouble Shooting". If the problem repeats after taking the action, contact to A/S center.
11) Install this communication module in the status that PLC power is 'OFF'.
12) After finishing the communication cable connection, apply the power ON and check the normal action in the LED action status. If it is normal, download the corresponding program into GMWIN for GLOFA series and into KGLWIN for MASTER-K series and run the program.
13) In case that the power of Remote station among communication stations between master module and Smart I/O module is 'OFF' and then 'ON', the remote station enters into the automatic Start if mother station has the initialized program and if no initialized program, the normal start is not available. So it is required to prepare the initialized program in the mother station. (Refer to the communication user's manual.)

9.1.5 Notices in installing Modbus module

Modbus Smart I/O can set max. 32 stations.

1) The user must select the action mode for Cnet I/F module correctly and set the action mode accordingly. If setting the action mode wrong, it may cause the communication error.
2) For the channel using the exclusive communication mode, it is required to set the station no. In case of the system using the exclusive communication mode and communicating by RS-422/485, it is not allowed to have Modbus module of the same station no. in the same network. In case of RS-422 communication, if there is double station no., it may cause the communication error.
3) For communication cable, the designated standard cable should be used. If not, it may cause the significant communication obstacle.
4) Check if the communication cable is cut off or short-circuited before installation.
5) Tighten the communication cable connector completely and fix the cable connection tightly. If cable connection is not complete, it may cause the significant communication obstacle.
6) RS-422/485 cable should connect the TX/RX correctly. When several stations are connected, the first 2 stations should be connected by TX and RX and other stations should be connected by TX to TX and RX to RX themselves. (RS-422 communication)
7) In case of RS-485 communication, TX and RX of Cnet I/F module should be connected each other.
8) If the communication cable is twisted or the cable is not connected properly, it may cause the communication error.
9) In case of connecting the long distance communication cable, the wiring should be separated far from the power line or inductive noise and if necessary, it should be covered.
10) If LED action is abnormal, check the trouble causes referring to this manual Chapter 11.'Trouble Shooting". If the problem repeats after taking the action, contact to A/S center.
11) In case that the power of Remote station among communication stations between master module and Smart I/O module is 'OFF' and then 'ON', the remote station enters into the automatic Start if mother station has the initialized program and if no initialized program, the normal start is not available. So it is required to prepare the initialized program in the mother station. (Refer to the communication user's manual.).

9.1.6 Notices in Handling

Here describes the notices in handling from the opening of each unit and module to the installation.

- Do not fall it down or apply the strong impact.
- Do not remove the PCB from the case. It may cause the failure.
- Cares should be taken not to make the foreign materials such as the wire remnants etc. enter inside of the unit when wiring. If it entered, remove them before applying the power.

1) Notices in handling the product

Here describes the notices in handling and installing the basic unit and the extended module.

(1) Recheck the I/O standard

Input part should pay the attention to the input voltage and in case of output part, if applying the voltage exceeding max. capacity to open/close, it may cause the failure, breakage and the fire.

(2) Use Wire

The wire should be selected considering the ambient temperature, allowable current and the min. spec. of the wire should be more than AWG24(0.18mm^2).

(3) Environment

When I/O wiring, if it is close to the heat generating machine or material or if the wiring is contacted directly to the oil for a long time, it may cause the short-circuit, breakage and failure.

(4) Polarity

Check the polarity before applying the power to the terminal stand that has the polarity. Special cares should be taken not to wire AC input power to DC24V external power supply terminal on the edge of basic unit input part. In case of DeviceNet, 24V power enters into the communication cable together and it is not necessary to wire separately.

(5) Wiring

- When wiring the I/O line with high voltage cable and the power cable together, the induction obstacle occurs that may cause the failure and malfunction.
- It is not allowed to pass the cable in front of I/O action indication part (LED). (because it prevents from distinguishing the I/O indication.)
- In case that the inductive load is connected to the output part, please connect the surge killer or diode to the load in parallel. Connect the cathode of diode to the '+' side of the power.

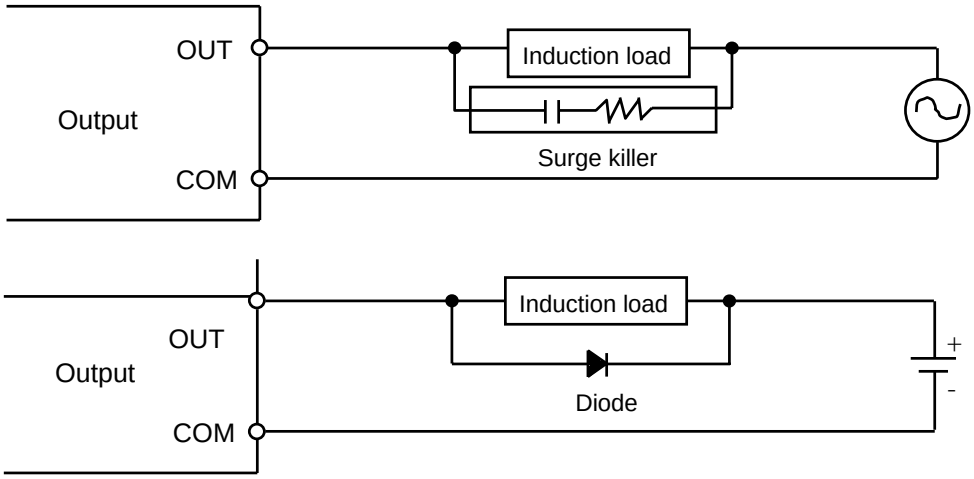

(6) Terminal stand

When wiring the terminal stand or making the screw hole, cares should be taken not to make the wire remnants enter into the PLC. It may cause the malfunction and failure.

(7) Except that mentioned on the above, do not apply the strong impact to the basic or extended unit or remove the PCB from the case.

2) Notices in Adding

Here describes the notices in adding the PLC to the control panel.

(1) The sufficient distance is required to have the well-ventilated room and facilitate the exchange of the basic unit and the extended module. Especially, for the periodical exchange of battery (3 years), please separate the left side of the basic unit and the control panel at least 100mm.

(2) For the max. radiation effect, it is required to install it as shown on the figure below.

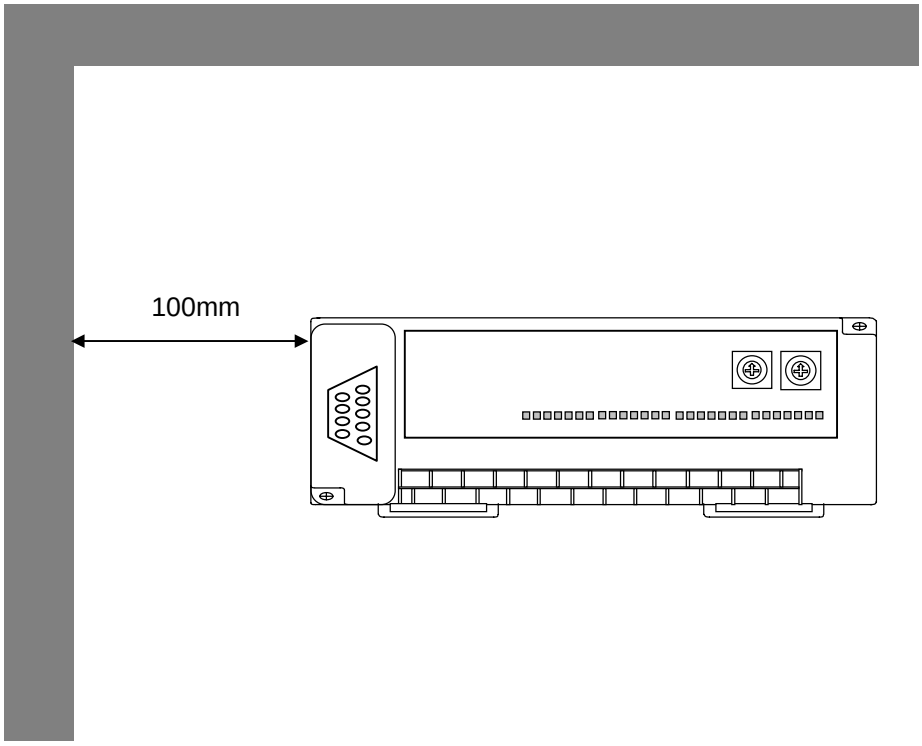

(3) Use the different panel for the large sized electronic contactor or the vibration source such as no-fuse braker etc. and install separately.

(4) Install the duct for wiring if necessary.
But, if the dimension of upper part or lower part of PLC is smaller than the figure below, please pay attention to the following.

- In case of installing on the upper PLC, the height of wiring duct should be less than 50mm for the good ventilation.
- In case of installing on the lower PLC, please consider minimum radius of the cable.

(5) In case that the equipment is installed in front of the PLC (inside the door) to avoid the effect of radiant noise or the heat, it is required to separate more than 100mm and install.
And the left/right direction of the unit and the equipment should be separated more than 100mm and installed.

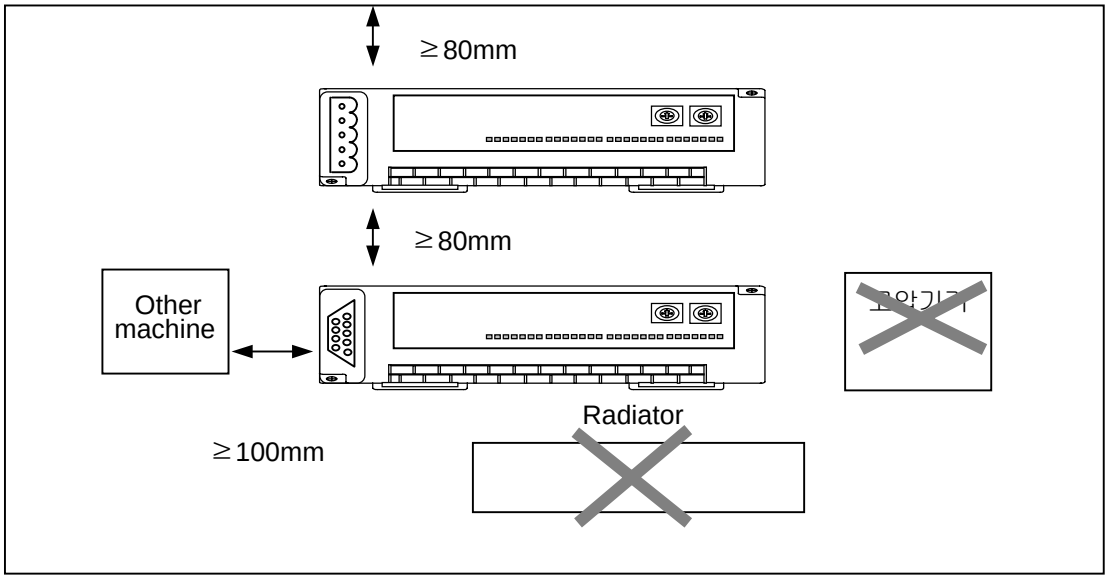

PLC Adding

(6) As Smart I/O is installed with Hook for DIN rail (rail width 35mm), it is available to attach the DIN rail.

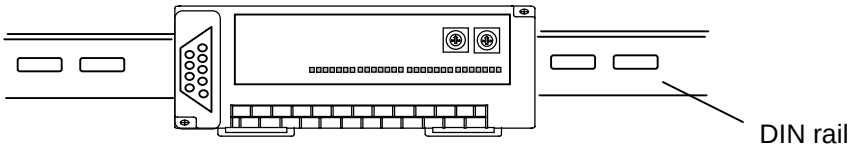

9.2 Wiring

Here describes the notices related to the wiring in case of using the system..

9.2.1 Power Wiring

1) For the use power, please use DC 24V power supply.
2) If the power variation is larger than the regular range, please connect the constant voltage transformer.
3) In order to prevent the noise from the power cable, it is required to twist the power cable densely if possible, and connect within the shortest distance.

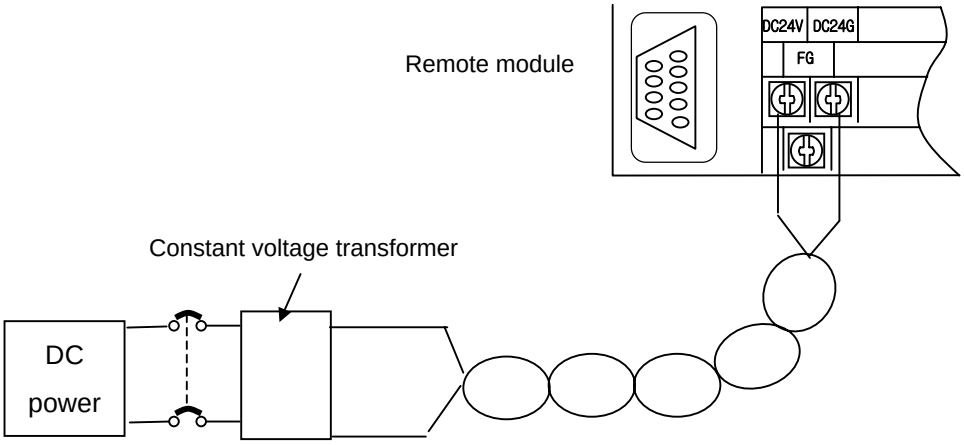

4) Connect the power that the noise between lines or between grounds is small.
(if there is much noise, please connect the insulation transformer.)

5) For PLC power, I/O machine and power machine, it is required to divide the system as follows.

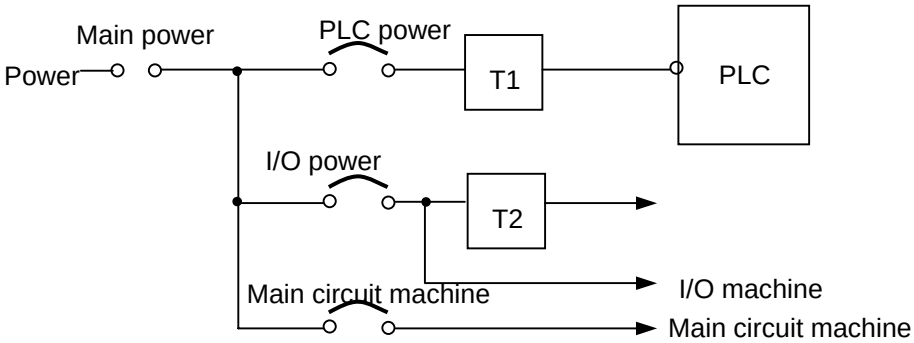

※ T1,T2: Constant voltage transformer

6) For the power cable, it is required to use the thick one ($2mm^2$) to make the small falling down of the voltage.

7) The power DC24V cable is not allowed to approach closely to the main circuit (high voltage, convection current) cable, I/O signal cable and needs to separate more than 80mm apart.

8) Please use the surge observer to prevent the lightning as shown on the below.

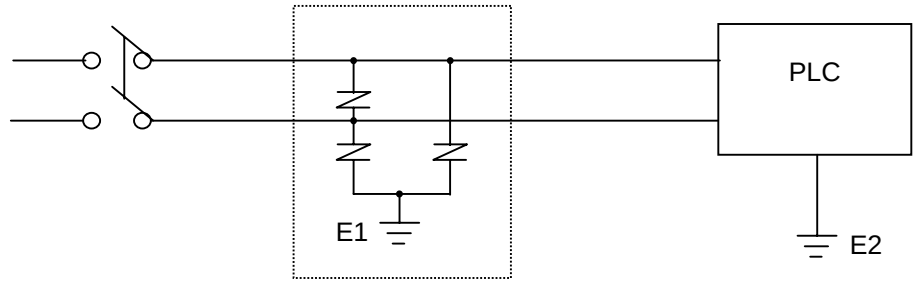

Surge observer for lightning

Remark

1) Separate the earth(E1) of the surge observer for lightning and the earth (E2) of PLC.
2) Select the surge observe for lightning so that it does not exceed max. allowable voltage of the observer even when the power voltage is rising maximum.

9) When you are afraid of the invasion of the noise, please use the insulation sealed transformer or the noise filter.

10) In case of the wiring of each input resource, the wiring of the sealed transformer or the wiring of the noise filter is not allowed to pass the duct.

9.2.2 I/O Machine Wiring

1) The spec. of I/O wiring cable is 0.18~2 mm^2 and it is recommended to use the cable spec. (0.5mm^2) conveniently.
2) Input cable and output cable should be separated for wiring.
3) I/O signal cable should be separated at least 80mm from main circuit cable of high voltage, convection current when wiring.
4) In case that it is not available to separate the main circuit cable and the power cable, please use the shielded cable and earth the PLC.

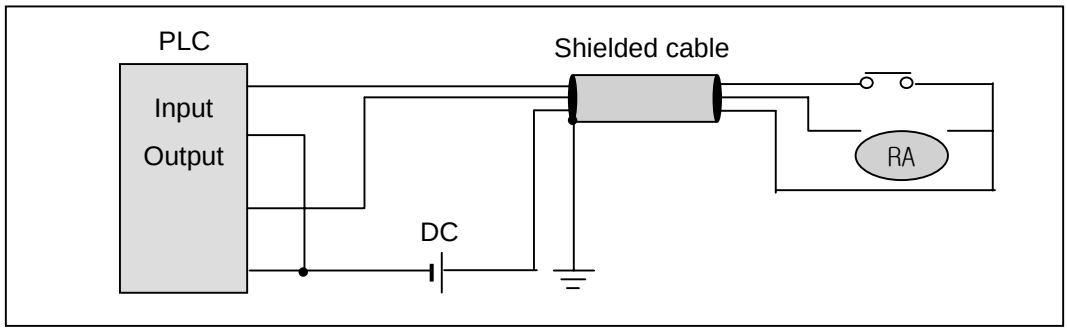

5) In case of pipe wiring, make sure of the pipe and then ground it.
6) DC24V output cable should be separated from AC110V cable and AC220V cable.
7) In case of wiring the long distance more than 200m, the error occurs according to the leakage current caused by the interline capacity.

9.2.3 Grounding Wiring

1) As this PLC carries out the sufficient noise policy, it is available to use without grounding except the case that there is much noise. But, when grounding, please refer to the following notices.
2) When grounding, please use the exclusive grounding if possible.
   For he grounding construction, please use the 3rd class grounding (grounding resistance less than 80 Ω).
3) If not available to use the exclusive grounding, please use the common grounding as shown on the figure B).

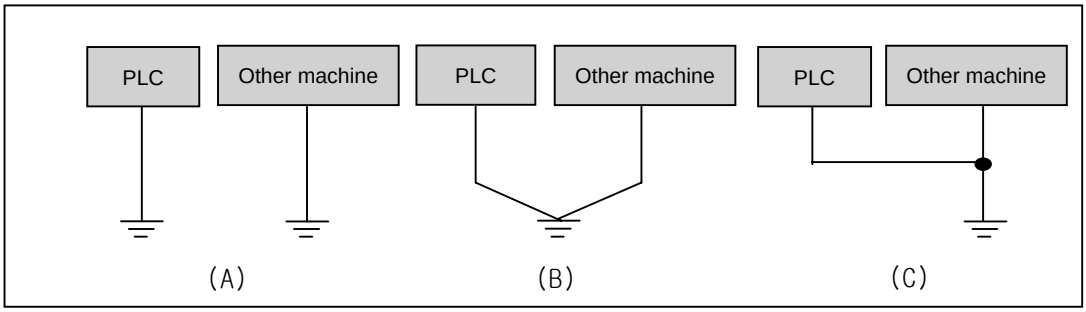

(A) exclusive grounding: Excellent (B) common grounding: Good
(C) common grounding : Bad

4) Please use the electric wire for grounding more than 2 mm^2 . Place the grounding point near this PLC if possible and shorten the length of the grounding cable.

- When connecting the extended base, please connect the extended connector accurately.
- Do not remove the PCB from the module case and modify the module.
- When adding/removing the module, the power should be OFF.
- Use the cellular phone or radio phone apart more than 30mm from the product.
- I/O signal cable and communication cable should be at least 10cm apart from the high voltage cable or the power cable to avoid the effect caused by the noise or the change of magnetic filed.

9.2.4 Cable Specification for Wiring

The Cable specification to be used for the wiring is as follows.

External connection type	Cable spec.(mm^2)	
	Low limit	High limit
Digital input	0.18 (AWG24)	1.5 (AWG16)
Digital output	0.18 (AWG24)	2.0 (AWG14)
Analog I/O	0.18 (AWG24)	1.5 (AWG16)
Communication	0.18 (AWG24)	1.5 (AWG16)
Main power resource	1.5 (AWG16)	2.5 (AWG12)
Protection grounding	1.5 (AWG16)	2.5 (AWG12)

For the power and I/O wiring for Smart I/O, it is required to use the compressed terminal.

- Use ‘M3’ type screw for the terminal.
- Tighten the terminal screw with 6 ~ 9 kg · cm torque.
- Use the fork type screw for the compressed terminal.

Example of the proper compressed terminal (fork type)

≤ 6.2mm

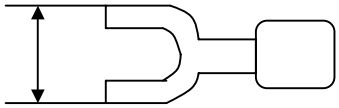

Chapter 10 Maintenance and Repair

To maintain the PLC in the optimal status, please carry out daily check and regular check.

10.1 Repair and Check

I/O module is composed usually of semiconductor microelectronic device and the life is semi-permanent. As the microelectronic device may occur the error caused by the ambient environment, it is required to check periodically. The following is the items to be checked 1~2 times every 6 months.

Check items		Judgment basis	Action
Ambient environ ment	Temperature	0 ~ +55°C	Control the use temperature and the use humidity.
	Humidity	5 ~ 95%RH	
	Vibration	No vibration	Use the dust-proof rubber or take the vibration protection policy.
Shaking of each unit and module		No shake	Make all unit and module not to be shaked
Terminal screw loosened.		No loosening	Tighten the loosened screw.
Input voltage change rate		Within –15%/+10%	Maintain the change rate within the allowable range.
Spare parts		Check if the quantity of spare part and the preservation status is good.	Make up the insufficient and improve the preservation status.

10.2 Daily Check

Daily checking point for Smart I/O module is as follows.

1) Daily check for Profibus-DP module

Checking items		Description	Judgment basis	Action
Cable connection status		Cable loosening	No loosening	Tighten the cable
Module connection status		Screw loosening	No loosening	Tighten the module screw.
Indication LED	RUN LED	Light 'ON' check	Steady-state of Power	Refer to Chapter 3.
	RDY LED	Light 'ON' check	Steady-state of communication module interface	Refer to Chapter 3.
	ERR LED	Light 'ON' check	Abnormal communication H/W or cable check	Refer to Chapter 3.

2) Daily check for DeviceNet module

Checking items		Description	Judgment basis	Action
Cable connection status		Cable loosening	No loosening	Tighten the cable
Module connection status		Screw loosening	No loosening	Tighten the module screw.
Indication LED	PWR LED	Light 'ON' check	Steady-state of Power	Refer to Chapter 3.
	MS LED	Light 'ON' check	Steady-state of communication module interface (if abnormal, check the H/W or the cable)	Refer to Chapter 3.
	NS LED	Light 'ON' check	Steady-state of communication module network (if abnormal, check Smart I/O H/W)	Refer to Chapter 3.

3) Daily check for Rnet module

Checking items		Description	Judgment basis	Action
Cable connection status		Cable loosening	No loosening	Tighten the cable
Module connection status		Screw loosening	No loosening	Tighten the module screw.
Indication LED	PWR LED	Light 'ON' check	Steady-state of power	Refer to Chapter 3.
	TX LED	Light 'ON' check	While sending/receiving with the master (if error occurs, check the H/W or the cable)	Refer to Chapter 3.
	RX LED	Light 'ON' check	While communicating with Smart I/O, (if error occurs, check Smart I/O Hardware.)	Refer to Chapter 3.

4) Daily check for Modbus module

Checking items		Description	Judgment basis	Action
Cable connection status		Cable loosening	No loosening	Tighten the cable
Module connection status		Screw loosening	No loosening	Tighten the module screw.
Indication LED	PWR LED	Light 'ON' check	Steady-state of power	Refer to Chapter 3.
	TX LED	Light 'ON' check	Steady-state of communication module interface (if error occurs, check the H/W or the cable)	Refer to Chapter 3.
	RX LED	Light 'ON' check	Steady-state of communication network (if error occurs, check Smart I/O hardware.)	Refer to Chapter 3.

10.3 Regular Check

Check the following items 1~2 times every 6 months and take the necessary actions.

Checking items		Checking method	Judgment basis	Action
Ambient environment	Temperature	Measure by thermometer/hygrometer.	0 ~ 55℃	Adjust suitable for general standard (in case of using in the area, apply the environment basis in the area)
	Humidity		5 ~ 95%RH	
	Pollution	Measure the corrosive gas.	No corrosive gas	
Module status	Loosening, shaking	Shake the communication module.	Tightening status	Tighten the screw.
	Dust, foreign material adding	Macrography	No adding	
Connection status	Terminal screw loosened	Tightening by the driver	No loosening	Tightening
	Pressed terminal approach	Macrography	Proper interval	Correction
	Connector loosened.	Macrography	No loosening	Connector correction Screw tightening
Power/voltage check		Voltage measure between terminals	AC 85 ~ 132V AC 170 ~ 264V	Power supply change

Chapter 11 Trouble Shooting

Here describes the contents of each error to be occurred while operating the system, the method to find the cause and the action.

11.1 Basic Procedure of Trouble Shooting

It is important to use the high reliable machine to increase the system reliability but it is important to take a prompt action when the trouble occurs as well.

To start the system promptly, it is more important to find the trouble occurring cause promptly and take the necessary action. The basic items to comply when taking this trouble shooting are as follows.

1) Check by the naked eye

Check the following items by the naked eye.

- Machine action status (stop, action)
- Power appliance status
- I/O machine status
- Wiring status (I/O cable, extended or communication cable)
- Check the indication status of each indicator (POWER LED, RUN LED, ERR LED, TX LED,RX LED, MS LED,NS LED, I/O LED etc.) and connect the peripheral device and then check the PLC action status or the program contents.

2) Check the trouble

Examine how the trouble is changed by the following action.

- Place the key switch on STOP position and apply the power ON/OFF.

3) Limit range

Estimate what is the trouble cause using the above method.

- Is it the cause from PLC itself? Or external cause?
- Is it the cause from I/O part? Or other cause?
- Is it the cause from PLC program?

11.2 Trouble Shooting

Here describes the trouble finding method, the error code and the actions on the above by dividing them per phenomenon.

Description of Trouble

When POWER LED is OFF	Action method when POWER LED is OFF.
When ERR LED is blinking	Action method when ERR LED is blinking.
When RUN LED is OFF.	Action method when RUN LED is OFF.
In case of abnormal operation I/O part	Action method in case of abnormal operation of I/O part
When program write does not work	Action method when program write does not work.

11.2.1 Action method when POWER LED is OFF.

Here describes the action order when POWER LED is OFF while apply the power or during the operation.

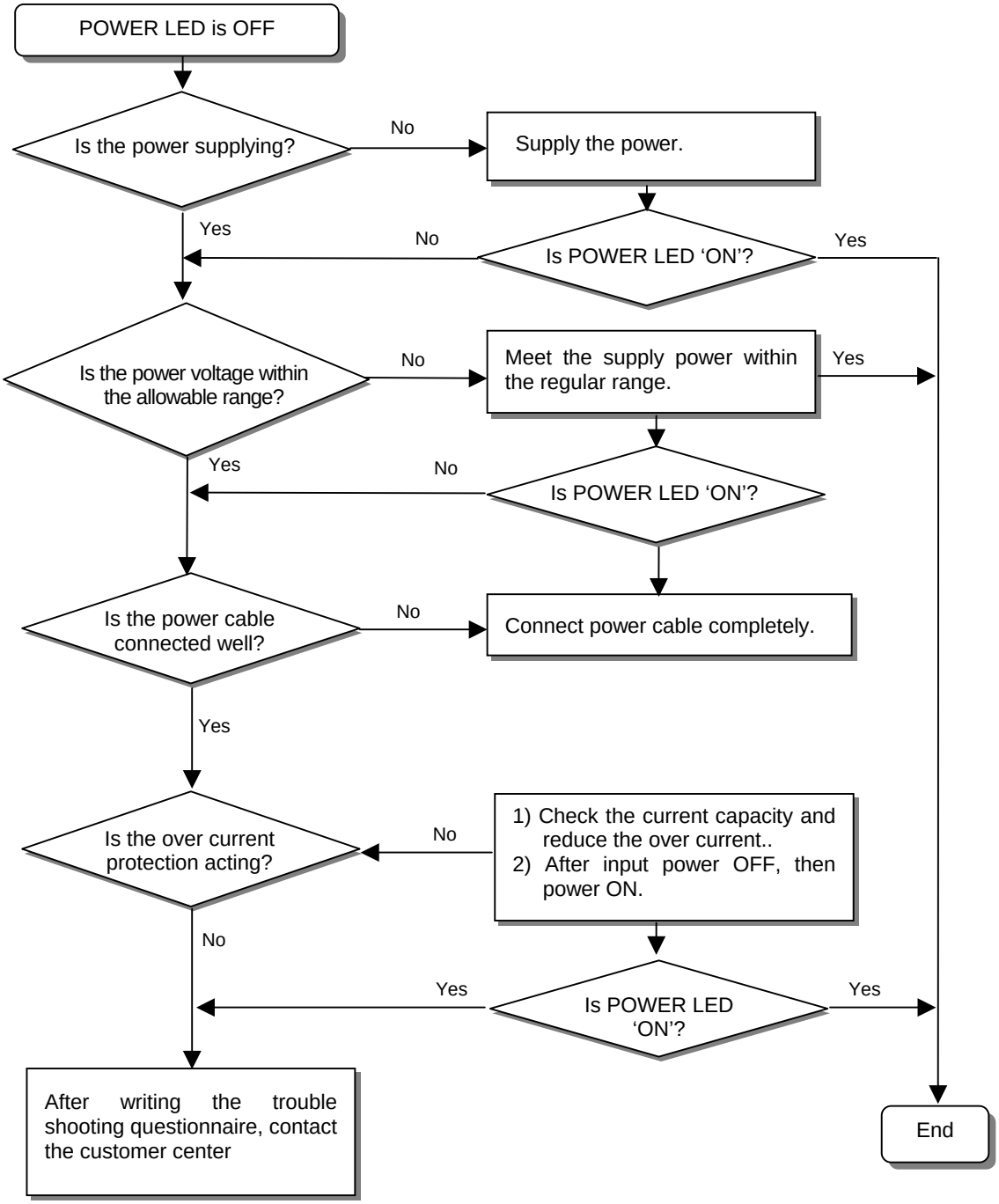

11.2.2 Action method when ERR LED is blinking.

Here describes the action order when ERR LED is blinking in case of the power input, or when operation start, or during operation.

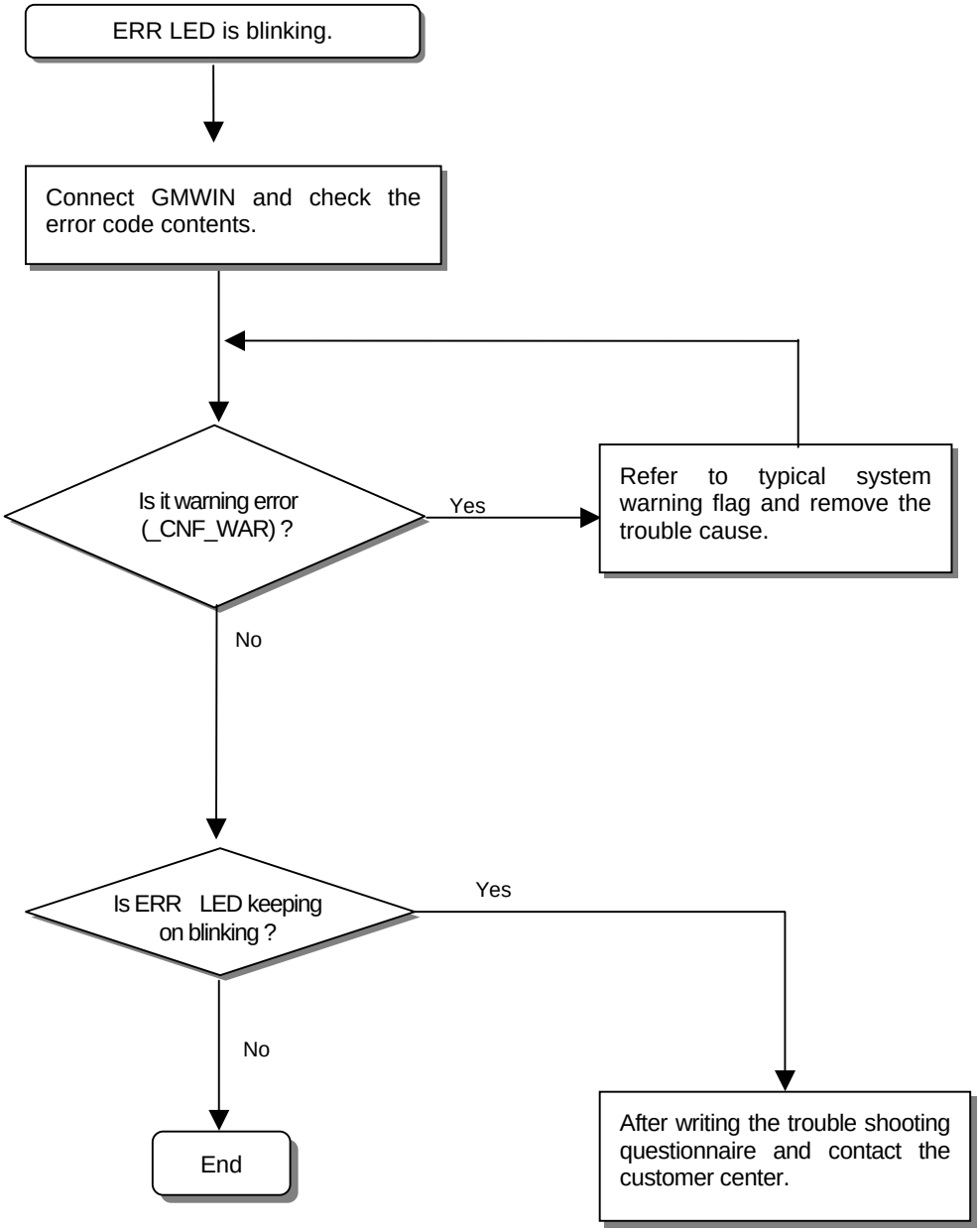

11.2.3 Action method when RUN LED is OFF

Here describes the action order when RUN LED is blinking in case of the power input, or when operation start, or during operation.

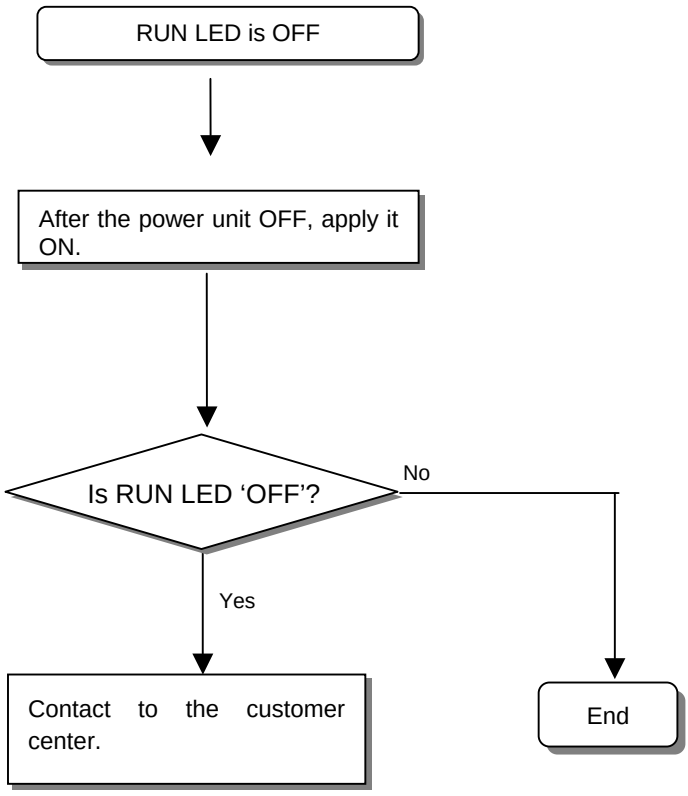

11.2.4 Action method when I/O part does not work normally.

Here describes the action order when I/O part does not work normally during operation, as shown on the program example below.

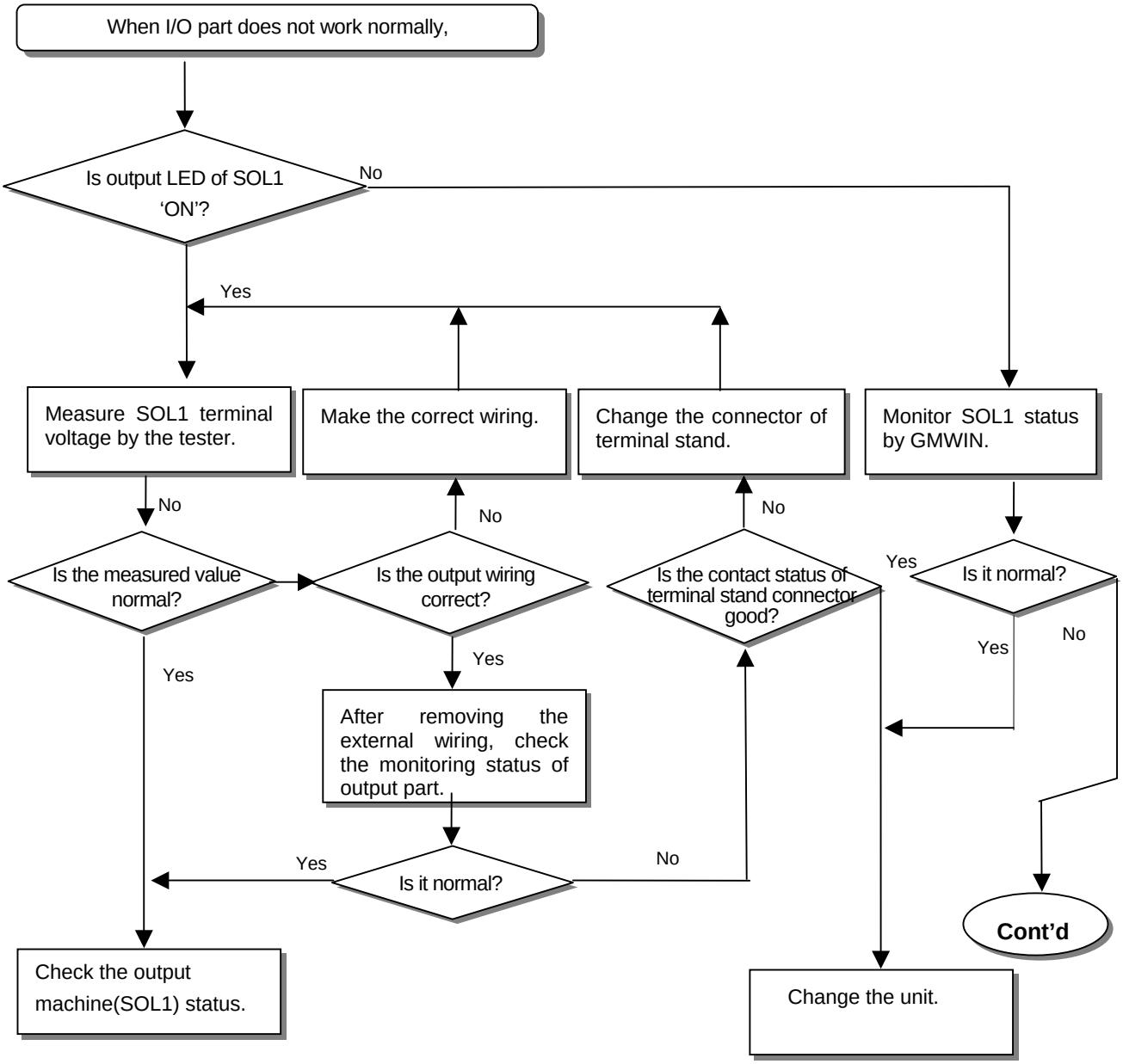

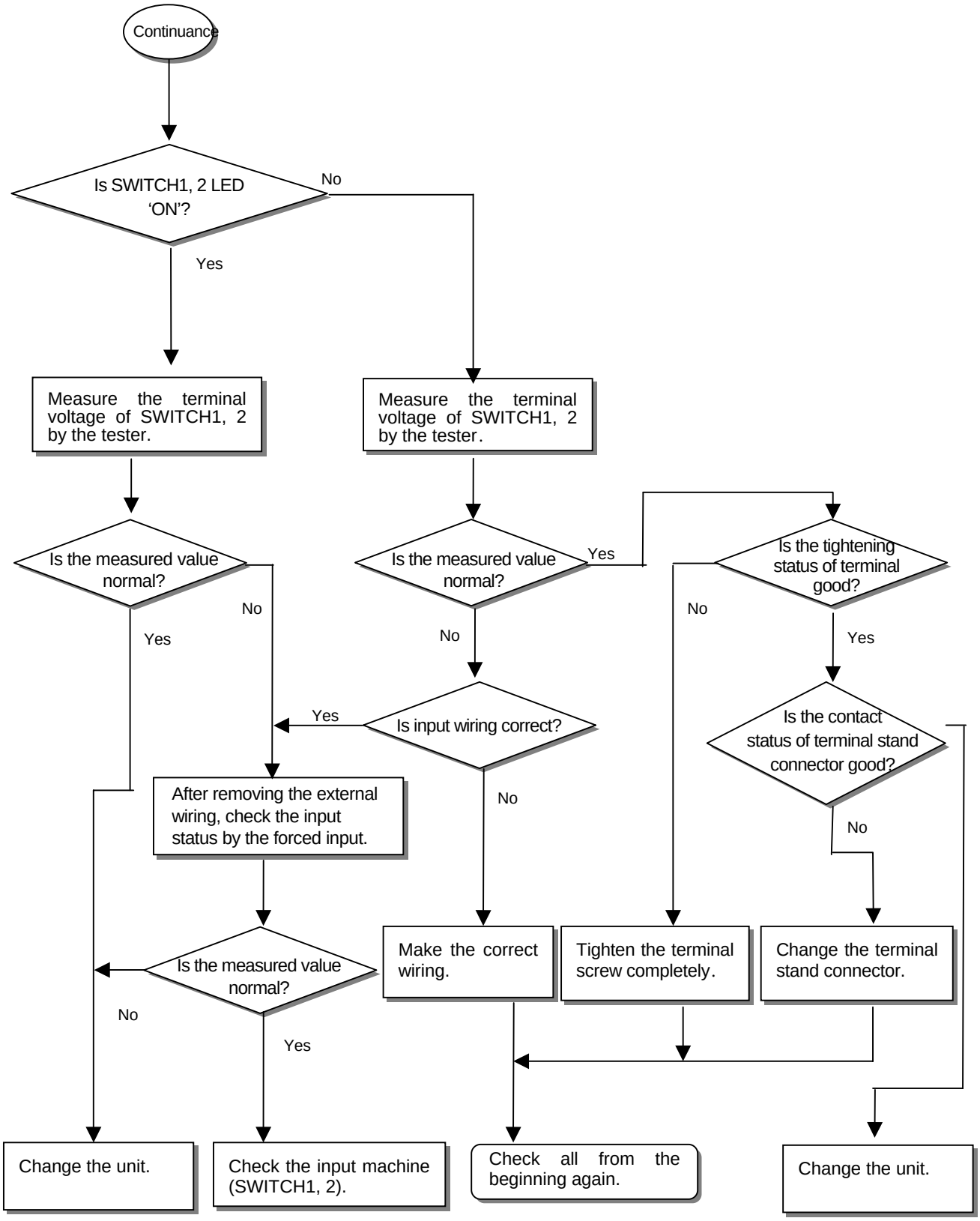
Continuance
Is SWITCH1, 2 LED 'ON'?
No
Yes
Measure the terminal voltage of SWITCH1, 2 by the tester.
Measure the terminal voltage of SWITCH1, 2 by the tester.
Is the measured value normal?
No
Yes
Is the measured value normal?
Yes
No
Is the tightening status of terminal good?
No
Yes
Yes
Is input wiring correct?
Is the contact status of terminal stand connector good?
After removing the external wiring, check the input status by the forced input.
No
No
Is the measured value normal?
Make the correct wiring.
Tighten the terminal screw completely.
Change the terminal stand connector.
No
Yes
Change the unit.
Check the input machine (SWITCH1, 2).
Check all from the beginning again.
Change the unit.

11.2.5 Action method when *Program Write* does not work

Here describes the action order when Program write does not work in the Master CPU.

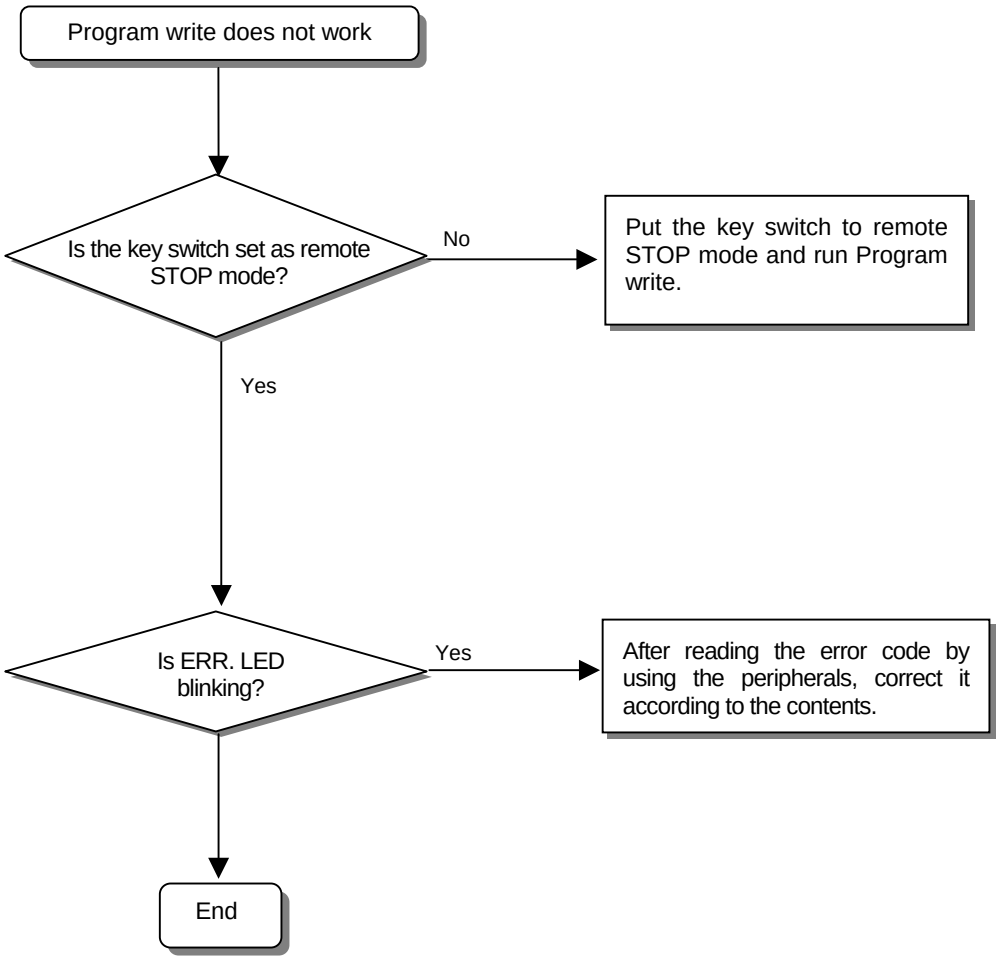

11.3 Trouble Shooting Questionnaire

If the trouble occurs when using SMART I/O series, fill in the following questionnaire and contact to the customer center by phone or by fax.

• In case of error related to specific and communication module, use the questionnaire added to the user's manual of the corresponding product.

1. User contact point : TEL.) _____
FAX) _____
2. Model : ( )
3. Applied machine details
– Network status : – OS version ( ), – Serial no. of product ( )
– GMWIN version no. used in program compile : ( )
4. brief description of control object machine and system :

5. Network model using :
6. ERR LED 'OFF' of network unit? Yes( ), No( )
7. Error message content by GMWIN :
8. Action trial status for the error code. :
9. Trouble shooting method for other error action :
10. Error features
• Repeat( ) : periodical( ) , specific sequence level related( ) environment related( )
• Intermittent( ) : error interval :
12. Detail description for the error phenomena :

13. Configuration diagram of applied system:

APPENDIX

A.1 Communication Terminology

A1.1 Profibus-DP

Profibus

Profibus is the protocol that Bosch, Siemens, Klockener-Moeller in Germany has developed and designated as German standard DIN 19245 as well as the network designated as European standard EN50 170 with WorldFIP, P-NET recently.

Profibus is used for the real time communication between field equipment in the field of production automation, processing control, building automation and the product group is divided into Profibus-FMS (Rnet Message Specification), Profibus-DP (Decentralized Periphery), Profibus-PA(Process Automation).

Profibus-FMS

This is the solution for general purpose that provides the communication function in the cell level including the function to send the program file to act the field equipment and the related data file, the function to control the program remotely through the network, and the function to manage the various accidents to be occurred in the process of control and automation system etc.

Profibus-DP

This is the communication method to send the real time data between field equipment within the shortest time and substitute the communication system using the existing 24V or 4~20 mA analog signal with high speed digital communication method. The example to be applied is the communication between field equipment such as various sensor and actuator etc. installed in the PLC and the field.

Profibus-PA

This is made specially for process automation and the safety device is embedded and available to connect the sensor and actuator with one common bus line and perform the data communication and the power supply on the bus using 2-wire technology in accordance with International Standard IEC 1158-2.

Sycon

This is a Profibus Network Configuration Tool and when using the LGIS Master module (G3/4/6L-PUEA) as a Profibus Network, use Sycon to configure Profibus Network and download the information to the corresponding master module.

GSD file

This is the electronic device data sheet and includes manufacturer name, device name, H/W and S/W release status, support transmission rate, master related spec. (max. slave

number available to connect, upload/download option etc.) and slave related spec. (I/O channel number and type, diagnosis text spec. and module information equipped with moduler device.).

EDD (Electronic Device Description)

This introduces the device registration information of field device generally. It allows to describe the complicated automation system as well as simple field device (such as sensor and actuator) regardless of manufacturer. The device description is provided per device in the electronic form made by the manufacturer and EDD file is read by engineering tool and enables Profibus system to be set easily. And it describes the device variable and its function as well as contains the elements for operation and visualization.

Broadcast Communication

This means to send the message not recognized by the action Station to all Station (Master, Slave).

Multicast Communication

This means that the action station sends the not recognized message to the pre-defined Station group (Master, Slave).

A1.2 DeviceNet

ODVA (Open DeviceNet Vendor Association)

This is to contribute for the promotion of World industrial Automation technology, DeviceNet and the related technology. It participates in the exhibition for technical seminar and PR activity and writes/distributes the technical documents to attract the attention of the sales agents and the user for DeviceNet. ODVA's activity includes the PR of DeviceNet Specification for each industrial sales organization in charge of network standardization, the requirements of the expansion or amendment for DeviceNet Specification according to the requirement of the market when the same Specification is selected in the real industrial automatic control system, and the proposal of the expansion or amendment of DeviceNet Specifications to the ODVA.

Bus-off

When the trouble occurs in the power of network, the error will occur.

CAN (Controller Area Network)

This is the communication protocol designed for automobile exclusive communication. Device network adapted CAN technology.

Scanlist

If the master module wants to communicate with the Slave module, it is required to know all information of the slave module (station address. message selection (Poll, Strobe etc.)) and set. This information is called 'Scanlist'.

Dnet I/F module of GLOFA-GM PLC can set this easily just by high speed link parameter setting in GMWIN.

Connection

This means the logical connection between master and slave connected by DeviceNet and is used to maintain and manage all communication.

Profile

This provides the information for Device Configuration data. (Printed data sheet, EDS; Electronic Data Sheet etc.)

Master/Slave

The module to send/receive and manage the data is 'master module' and the module to reply to the data that the master module sends is 'slave module'.

Packet

This is a pack of data that is a basic unit to transmit the data through the network. It attaches the header (Message Identifier) to the front part to add the information of the destination to go and other necessary information etc.

A1.3 Rnet

Master module (Rnet Master Module: RMM)
This is Rnet I/F module that is installed I/O digit of basic base.

Master station
This is the station connected directly GMWIN/KGLWIN so that the user performs the program download and monitoring/debugging in the same network including CPU.

Remote I/O station
Remote I/O module controls the I/O of remote station receiving I/O data from master station instead of PLC CPU in the PLC system.

Rnet
Fieldbus is the lowest network connecting the control machine and instrument device, selecting 3 among 7 layers of OSI. 3 layers are composed of Physical layer which is composed of H2 (1Mbps electric), H1 (31.23Kbbs electric), light, Wireless etc., Data Link layer selecting the Scheduled and Circulated Token bus, and Application layer that charges in the application role and this is the standard selecting the ‘User layer’ additionally.

Token
This is the access right control for Physical Medium and has the right to send the data of self station.

Rnet station no.
Station no. (G3L-RUEA...etc.) of communication module selecting Rnet specification. The station no. used in Rnet shall be set by the switch attached in the front of communication module and used as station no. of all service including high speed link service.

Manchester Biphase-L
This is data modulation method used in Rnet. The data is encoded (Encode) using Manchester-L Code and sent and the received data after encoding by Manchester is converted by Decoding.

CRC (Cyclic Redundancy Check)
This is one of error detection method and is used widely for the synchronous transmission that is called as ‘cyclic sign method’.

Terminal resistor
This is the resistance to be used to meet the mutual impedance between sending/receiving side of Physical Layer and Terminal resistance of Rnet 110Ω, 1/2W.

High Speed Link

This is the communication method to be used only between Rnet communication module so that the user can send/receive the data with high speed. The communication is carried out by setting the high speed link parameter in GMWIN/KGL-WIN.

Segment

This is the local network connecting all station by using the same Token without using any other connecting device (Gateway, repeater).

Network

This is the overall communication system composed of more than one segment and using the same Token.

A1.4 Modbus

Protocol

This is the communication regulation pre-defined on the sending/receiving side of information to send/receive the efficient and reliable information without error between more than 2 computer and terminals. Generally, it defines the establishment of calling, connection, structure of message exchange form, retransmission of error message, line inversion procedure, character synchronization between terminal etc.

BPS (Bits Per Second) and CPS(Characters Per Second)

BPS is the transmission rate unit how many bit is transmitted per second when transmitting the data and CPS is the number of character to be transmitted per second. Usually 1 character is 1Byte(8Bit) and thus, CPS is the byte number available to transmit per second.

Node

This means the connecting joint of data in network tree structure and generally the network is composed of lots of node. This is expressed also as Station no.

Packet

This is the term used in packet exchange method that divides the information into packet unit and transmits and also is the compound term of Package and Buket. Packet is the thing attached the header indicating the address of other station by dividing the transmitting data into the designated length.

Port

This is a part of data processing device to send/receive the data from remote terminal in the data communication and in case of Cnet serial communication.

RS-232C

This is the serial communication standard designated by EIA according to the recommendation of CCITT as the interface to connect the modem and terminal or model and computer. This is used for modem connection as well as direct connection to the null modem. The demerits are that the transmission distance is short and only 1:1 communication is available. The specification that overcome this demerits is RS-422, RS-485.

RS-422/RS-485

This is one of serial transmission specification and the transmission distance is long and 1:N connection is available comparing with RS-232C. The difference between 2 specification is that RS-422 uses 4 signal cable such as TX(+), TX(-), RX(+), RX(-) while RS-485 has (+), (-) 2 signal cable and performs the sending/receiving through the same signal cable. So, RS-422 performs full duplex mode communication and RS-485 performs semi duplex mode communication.

A.2 External Dimension

1) External dimension of 16 point unit

The external dimension of Profibus-DP, DeviceNet, Rnet, Modbus etc are all same.

Unit: mm

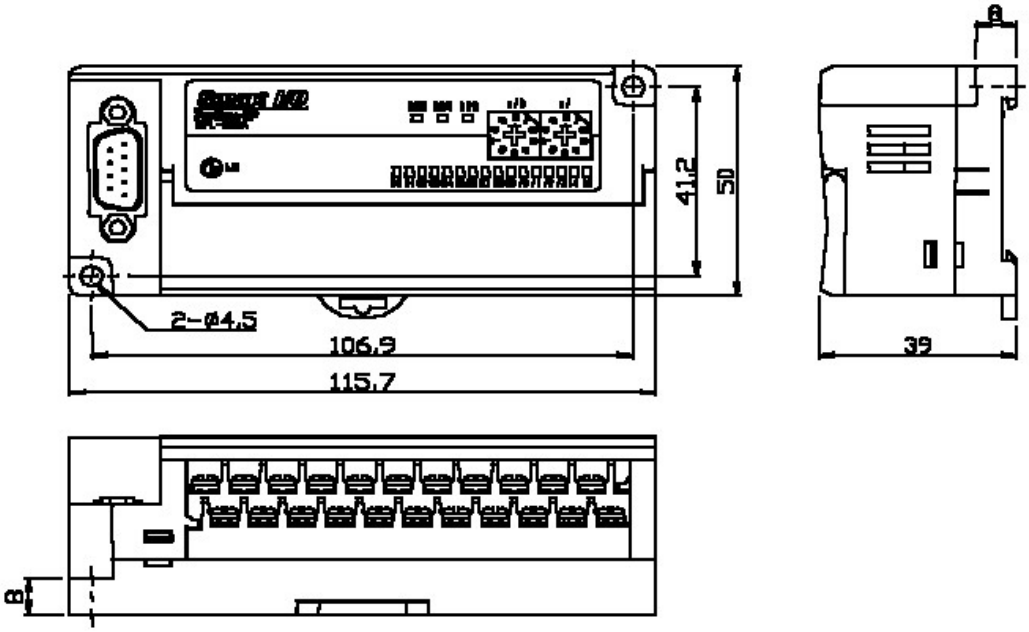

2) External dimension of 32 point unit

The external dimension of Profibus-DP, DeviceNet, Rnet, Modbus etc are all same.
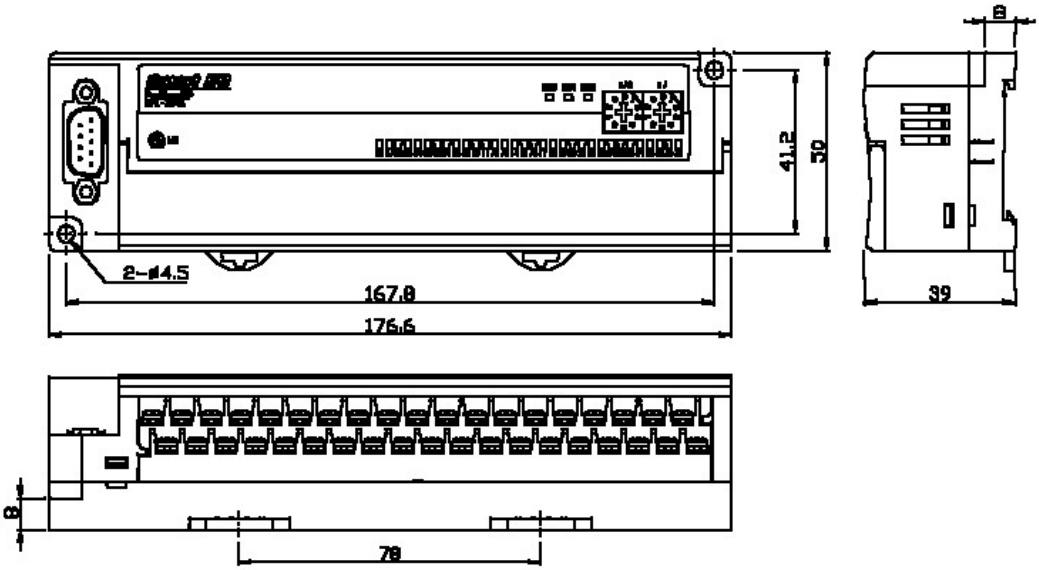
Unit: mm